1. ALL RESISTANCE VALUES ARE IN OHMS, 0.1 WATT +/- 5%.
2. ALL CAPACITANCE VALUES ARE IN MICROFARADS.
3. ALL CRYSTALS & OSCILLATOR VALUES ARE IN HERTZ.

REV	ECN	DESCRIPTION OF REVISION	CK APPD / DATE
A	0000880153	PRODUCTION RELEASED	2010-03-23

N90 SINGLE_BRD PVT

Fri Apr 16 15:07:25 2010

PDF PAGE	CSA PAGE	CONTENTS	SYNC MASTER	DATE
1	1	TABLE OF CONTENTS		
2	2	H3 JTAG, USB ,MISC		
3	3	H3 GPIO,UART,SPI,I2S,I2C,SDIO		
4	4	AP PWR		
5	5	AP PWR(CONT.)		
6	6	ANALOG VIDEO,H3 NAND, NAND		
7	7	H3 MIPI,DPORT,SMIA		
8	8	L61 CODEC		
9	9	HPHONE FILTERS, MIKEY		
10	10	BUTTON B2B, COMPASS		
11	11	ASHLEY PMU		
12	12	SIM,ACCEL,OVP,GYRO COMPASS		
13	13	HPARK, SWITCH ESD, SIM CARD		
14	14	DOCK,SPKR AMP		
15	15	NIMBUS, GRAPE, LCD CONN.		
16	16	CAMERA,STROBE,SENSOR B2B		
17	17	RADIO,USB MUX,EM PARTS		
18	18	TEST POINTS		

MCO 056-3008
BRD 820-2548
SCH 051-7921
BOM 639-0648(16GB,USI)
BOM 630-9941(16GB,MURATA)
BOM 639-0437(32GB,USI)
BOM 639-0609(32GB,MURATA)
BOM 639-0608(64GB,USI)
BOM 639-0607(64GB,MURATA)

H3P ALTERNATES

PART NUMBER	ALTERNATE FOR PART NUMBER	BOM OPTION	REF DES	COMMENTS:
339S0123	339S0108	?	U52	H3P + ELPIDA 512MB
339S0126	339S0108	?	U52	H3P + HYNIX 512MB

L9 (STROBE) ALTERNATE

PART NUMBER	ALTERNATE FOR PART NUMBER	BOM OPTION	REF DES	COMMENTS:
152S1173	152S0979	?	L9	

VIDEO BUFFER ALTERNATE

PART NUMBER	ALTERNATE FOR PART NUMBER	BOM OPTION	REF DES	COMMENTS:
353S2684	353S2493	?	U9	INTERSIL BUFFER

G3_RF ALTERNATES

PART NUMBER	ALTERNATE FOR PART NUMBER	BOM OPTION	REF DES	COMMENTS:
197S0371	197S0349	?	G3_RF	
197S0364	197S0349	?	G3_RF	

FL1_RF ALTERNATES

PART NUMBER	ALTERNATE FOR PART NUMBER	BOM OPTION	REF DES	COMMENTS:
155S0452	155S0435	?	FL1_RF	

G2_RF ALTERNATES

PART NUMBER	ALTERNATE FOR PART NUMBER	BOM OPTION	REF DES	COMMENTS:
197S0334	197S0292	?	G2_RF	

Y1_RF ALTERNATES

PART NUMBER	ALTERNATE FOR PART NUMBER	BOM OPTION	REF DES	COMMENTS:
197S0329	197S0299	?	Y1_RF	
197S0369	197S0299	?	Y1_RF	

Y2_RF ALTERNATE

PART NUMBER	ALTERNATE FOR PART NUMBER	BOM OPTION	REF DES	COMMENTS:
197S0342	197S0297	?	Y2_PMU	

L2_PMU ALTERNATE

PART NUMBER	ALTERNATE FOR PART NUMBER	BOM OPTION	REF DES	COMMENTS:
152S1172	152S0928	?	L2_PMU	

L7_PMU ALTERNATE

PART NUMBER	ALTERNATE FOR PART NUMBER	BOM OPTION	REF DES	COMMENTS:
152S1051	152S0927	?	L7_PMU	

LCD BL DRIVER ALTERNATE

PART NUMBER	ALTERNATE FOR PART NUMBER	BOM OPTION	REF DES	COMMENTS:
376S0769	376S0768	?	Q1_PMU	LCD BL FET DRIVER

Y1_PMU ALTERNATE

PART NUMBER	ALTERNATE FOR PART NUMBER	BOM OPTION	REF DES	COMMENTS:
197S0329	197S0299	?	Y1_PMU	
197S0369	197S0299	?	Y1_PMU	

PMU POWER IND ALTERNATE

PART NUMBER	ALTERNATE FOR PART NUMBER	BOM OPTION	REF DES	COMMENTS:
607-6810	607-6809	?	L1_L3_L16_L18_PMU	CYNTEC INDUCTORS
197S0369	197S0299	?	Y1_PMU	

SCH & PCB BOM CALLOUT

PART#	QTY	DESCRIPTION	REFERENCE DESIGNATOR(S)	CRITICAL	BOM OPTION
051-7921	1	N90_SCHEMATIC_TOP	SCH	Y	?
820-2548	1	N90_SINGLE_BOARD	PCB	Y	?

H3P BOM CALLOUT

PART#	QTY	DESCRIPTION	REFERENCE DESIGNATOR(S)	CRITICAL	BOM OPTION
339S0108	1	H3P WITH 512MB SAMSUNG DDR	U52	Y	?

BB MEMORY BOM CALLOUT

PART#	QTY	DESCRIPTION	REFERENCE DESIGNATOR(S)	CRITICAL	BOM OPTION
341S2509	1	BB_MEM_PROGRAMMED	U4_RF	Y	BB_MEM

N90 EEE BOM LABELS

PART#	QTY	DESCRIPTION	REFERENCE DESIGNATOR(S)	CRITICAL	BOM OPTION
825-2029	1	EEE FOR 630-9941 (16G)	EEE_6LU	Y	GOOD_MURATA
825-2029	1	EEE FOR 639-0609 (32G)	EEE_D7F	Y	BETTER_MURATA
825-2029	1	EEE FOR 639-0607 (64G)	EEE_D7D	Y	BEST_MURATA
825-2029	1	EEE FOR 639-0648 (16G)	EEE_DPM	Y	GOOD_USI
825-2029	1	EEE FOR 639-0437 (32G)	EEE_BA0	Y	BETTER_USI
825-2029	1	EEE FOR 639-0608 (64G)	EEE_D7E	Y	BEST_USI

NAND BOM OPTIONS

PART#	QTY	DESCRIPTION	REFERENCE DESIGNATOR(S)	CRITICAL	BOM OPTION
335S0682	1	16GB SAMSUNG 35NM FLASH WLGA52	U1	Y	GOOD_MURATA
335S0665	1	32GB SAMSUNG 35NM FLASH TLGA52	U1	Y	BETTER_MURATA
335S0707	1	64GB SAMSUNG 35NM FLASH LGA52	U1	Y	BEST_MURATA
117S0161	2	64GB NAND CE7 CE8 JUMPERS	R101, R102	Y	BEST_MURATA
335S0682	1	16GB SAMSUNG 35NM FLASH WLGA52	U1	Y	GOOD_USI
335S0665	1	32GB SAMSUNG 35NM FLASH TLGA52	U1	Y	BETTER_USI
335S0707	1	64GB SAMSUNG 35NM FLASH LGA52	U1	Y	BEST_USI
117S0161	2	64GB NAND CE7 CE8 JUMPERS	R101, R102	Y	BEST_USI

WIFI/BT BOM OPTIONS

PART#	QTY	DESCRIPTION	REFERENCE DESIGNATOR(S)	CRITICAL	BOM OPTION
339S0092	1	MURATA WIFI_BT MODULE	U2_RF	Y	GOOD_MURATA
117S0161	1	MURATA ID RESISTOR	R47_RF	Y	GOOD_MURATA
339S0092	1	MURATA WIFI_BT MODULE	U2_RF	Y	BETTER_MURATA
117S0161	1	MURATA ID RESISTOR	R47_RF	Y	BETTER_MURATA
339S0092	1	MURATA WIFI_BT MODULE	U2_RF	Y	BEST_MURATA
117S0161	1	MURATA ID RESISTOR	R47_RF	Y	BEST_MURATA
339S0091	1	USI WIFI_BT MODULE	U2_RF	Y	GOOD_USI
117S0161	1	USI ID RESISTOR	R46_RF	Y	GOOD_USI
339S0091	1	USI WIFI_BT MODULE	U2_RF	Y	BETTER_USI
117S0161	1	USI ID RESISTOR	R46_RF	Y	BETTER_USI
339S0091	1	USI WIFI_BT MODULE	U2_RF	Y	BEST_USI
117S0161	1	USI ID RESISTOR	R46_RF	Y	BEST_USI

PMU POWER IND CALLOUT

PART#	QTY	DESCRIPTION	REFERENCE DESIGNATOR(S)	CRITICAL	BOM OPTION
607-6809	1	POWER INDUCTORS	L1_L3_L16_L18_PMU	Y	?

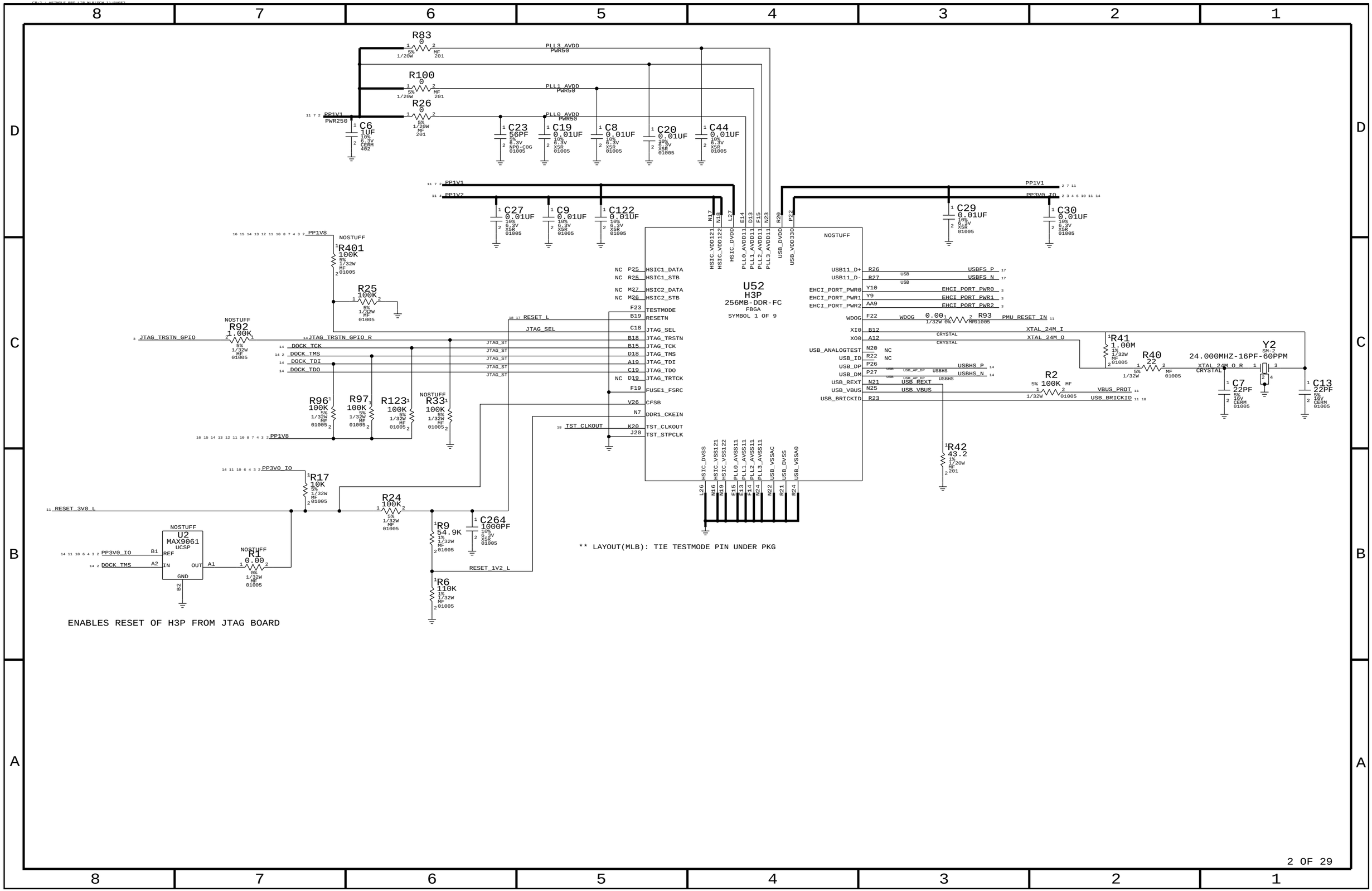
R83 0 5% 1/20W MF 201
PLL3_AVDD PWR50
R100 0 5% 1/20W MF 201
PLL1_AVDD PWR50
R26 0 5% 1/20W MF 201
PLL0_AVDD PWR50
PP1V1 PWR250
C6 1UF 10% 6.3V CERM 402
C23 56PF 5% 6.3V NP0-C0G 01005
C19 0.01UF 10% 6.3V X5R 01005
C8 0.01UF 10% 6.3V X5R 01005
C20 0.01UF 10% 6.3V X5R 01005
C44 0.01UF 10% 6.3V X5R 01005
PP1V1
PP1V2
C27 0.01UF 10% 6.3V X5R 01005
C9 0.01UF 10% 6.3V X5R 01005
C122 0.01UF 10% 6.3V X5R 01005
PP1V1
PP3V0_IO
C29 0.01UF 10% 6.3V X5R 01005
C30 0.01UF 10% 6.3V X5R 01005
PP1V8
NOSTUFF
R401 100K 5% 1/32W MF 01005
R25 100K 5% 1/32W MF 01005
NOSTUFF
R92 1.00K 5% 1/32W MF 01005
JTAG_TRSTN_GPIO
JTAG_TRSTN_GPIO_R
DOCK_TCK
DOCK_TMS
DOCK_TDI
DOCK_TDO
R96 100K 5% 1/32W MF 01005
R97 100K 5% 1/32W MF 01005
R123 100K 5% 1/32W MF 01005
NOSTUFF
R33 100K 5% 1/32W MF 01005
PP1V8
PP3V0_IO
R17 10K 5% 1/32W MF 01005
RESET_3V0_L
R24 100K 5% 1/32W MF 01005
C264 1000PF 10% 6.3V X5R 01005
R9 54.9K 1% 1/32W MF 01005
R6 110K 1% 1/32W MF 01005
RESET_1V2_L
NOSTUFF
U2 MAX9061 UCSP
REF
IN
OUT
GND
B1
A2
A1
B2
PP3V0_IO
DOCK_TMS
NOSTUFF
R1 0.00 0% 1/32W MF 01005
ENABLES RESET OF H3P FROM JTAG BOARD
RESET_L
JTAG_SEL
TST_CLKOUT
U52
H3P
256MB-DDR-FC
FBGA
SYMBOL 1 OF 9
NC P25 HSIC1_DATA
NC R25 HSIC1_STB
NC M27 HSIC2_DATA
NC M26 HSIC2_STB
F23 TESTMODE
B19 RESETN
C18 JTAG_SEL
B18 JTAG_TRSTN
B15 JTAG_TCK
D18 JTAG_TMS
A19 JTAG_TDI
C19 JTAG_TDO
NC D19 JTAG_TRTCK
F19 FUSE1_FSRC
V26 CFSB
N7 DDR1_CKEIN
K20 TST_CLKOUT
J20 TST_STPCLK
HSIC_VDD121
HSIC_VDD122
HSIC_DVDD
PLL0_AVDD11
PLL1_AVDD11
PLL2_AVDD11
PLL3_AVDD11
USB_DVDD
USB_VDD330
HSIC_DVSS
HSIC_VSS121
HSIC_VSS122
PLL0_AVSS11
PLL1_AVSS11
PLL2_AVSS11
PLL3_AVSS11
USB_VSSAC
USB_DVSS
USB_VSSA0
** LAYOUT(MLB): TIE TESTMODE PIN UNDER PKG
NOSTUFF
USB11_D+ R26 USBFS_P
USB11_D- R27 USBFS_N
EHCI_PORT_PWR0 Y10 EHCI_PORT_PWR0
EHCI_PORT_PWR1 Y9 EHCI_PORT_PWR1
EHCI_PORT_PWR2 AA9 EHCI_PORT_PWR2
WDOG F22 WDOG 0.00 1/32W 0% MF01005 R93 PMU_RESET_IN
XI0 B12 XTAL_24M_I
XO0 A12 XTAL_24M_O
USB_ANALOGTEST N20 NC
USB_ID R22 NC
USB_DP P26 USBHS_P
USB_DM P27 USBHS_N
USB_REXT N21 USB_REXT
USB_VBUS N25 USB_VBUS
USB_BRICKID R23
R41 1.00M 1% 1/32W MF 01005
R40 22 5% 1/32W MF 01005
XTAL_24M_O_R
Y2 24.000MHZ-16PF-60PPM SM-2
C7 22PF 5% 16V CERM 01005
C13 22PF 5% 16V CERM 01005
R2 100K 5% 1/32W MF 01005
VBUS_PROT
USB_BRICKID
R42 43.2 1% 1/20W MF 201

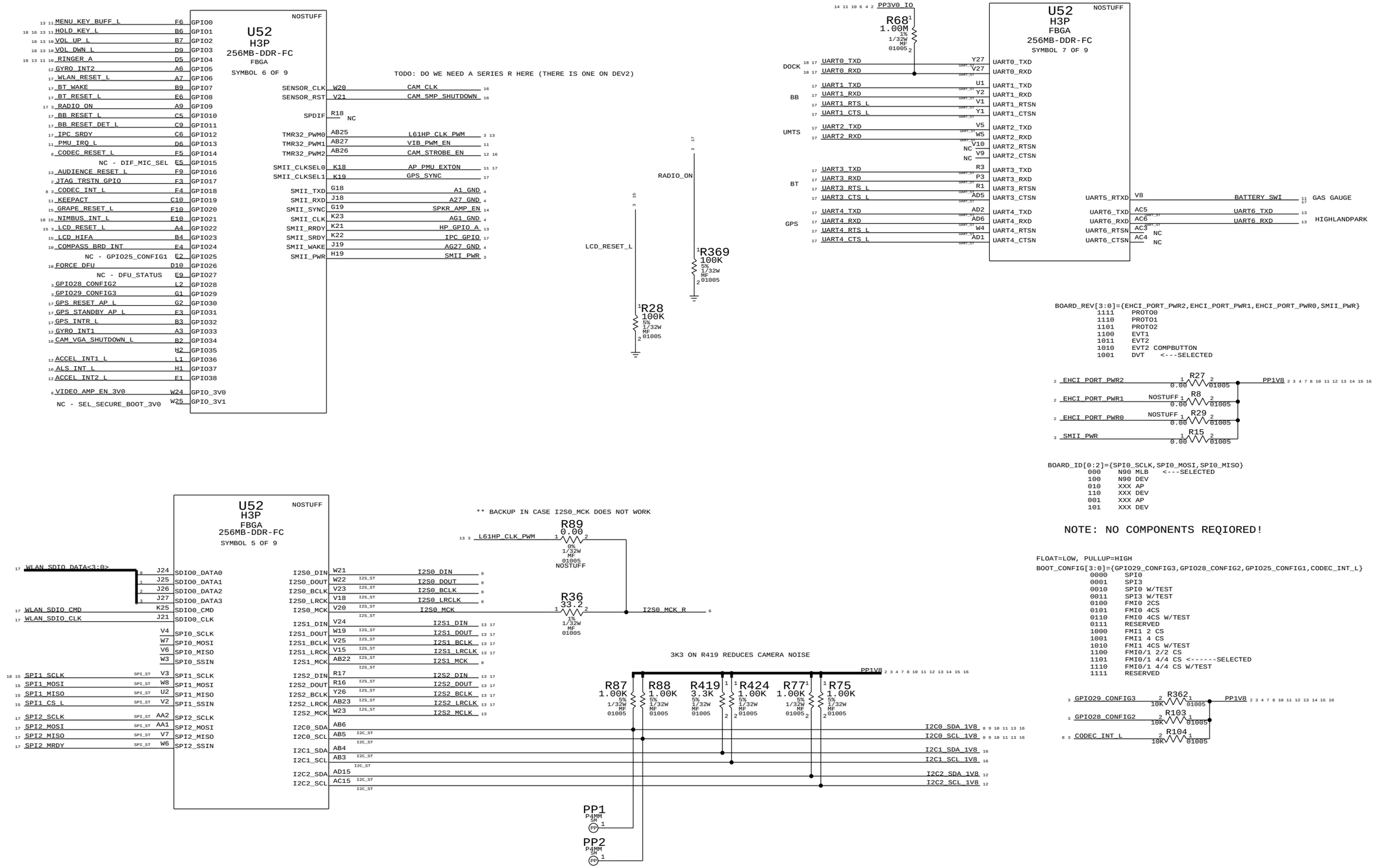
U52
H3P
256MB-DDR-FC
FBGA
SYMBOL 6 OF 9
NOSTUFF
MENU_KEY_BUFF_L F6 GPIO0
HOLD_KEY_L B6 GPIO1
VOL_UP_L B7 GPIO2
VOL_DWN_L D9 GPIO3
RINGER_A D5 GPIO4
GYRO_INT2 A6 GPIO5
WLAN_RESET_L A7 GPIO6
BT_WAKE B9 GPIO7
BT_RESET_L E6 GPIO8
RADIO_ON A9 GPIO9
BB_RESET_L C5 GPIO10
BB_RESET_DET_L C9 GPIO11
IPC_SRDY C6 GPIO12
PMU_IRQ_L D6 GPIO13
CODEC_RESET_L F5 GPIO14
NC - DIF_MIC_SEL E5 GPIO15
AUDIENCE_RESET_L F9 GPIO16
JTAG_TRSTN_GPIO F3 GPIO17
CODEC_INT_L F4 GPIO18
KEEPACT C10 GPIO19
GRAPE_RESET_L E10 GPIO20
NIMBUS_INT_L E10 GPIO21
LCD_RESET_L A4 GPIO22
LCD_HIFA B4 GPIO23
COMPASS_BRD_INT E4 GPIO24
NC - GPIO25_CONFIG1 E2 GPIO25
FORCE_DFU D10 GPIO26
NC - DFU_STATUS E9 GPIO27
GPIO28_CONFIG2 L2 GPIO28
GPIO29_CONFIG3 G1 GPIO29
GPS_RESET_AP_L G2 GPIO30
GPS_STANDBY_AP_L E3 GPIO31
GPS_INTR_L B3 GPIO32
GYRO_INT1 A3 GPIO33
CAM_VGA_SHUTDOWN_L B2 GPIO34
H2 GPIO35
ACCEL_INT1_L L1 GPIO36
ALS_INT_L H1 GPIO37
ACCEL_INT2_L E1 GPIO38
VIDEO_AMP_EN_3V0 W24 GPIO_3V0
NC - SEL_SECURE_BOOT_3V0 W25 GPIO_3V1
SENSOR_CLK W20 CAM_CLK
SENSOR_RST V21 CAM_5MP_SHUTDOWN
TODO: DO WE NEED A SERIES R HERE (THERE IS ONE ON DEV2)
SPDIF R18 NC
TMR32_PWM0 AB25 L61HP_CLK_PWM
TMR32_PWM1 AB27 VIB_PWM_EN
TMR32_PWM2 AB26 CAM_STROBE_EN
SMII_CLKSEL0 K18 AP_PMU_EXTON
SMII_CLKSEL1 K19 GPS_SYNC
SMII_TXD G18 A1_GND
SMII_RXD J18 A27_GND
SMII_SYNC G19 SPKR_AMP_EN
SMII_CLK K23 AG1_GND
SMII_RRDY K21 HP_GPIO_A
SMII_SRDY K22 IPC_GPIO
SMII_WAKE J19 AG27_GND
SMII_PWR H19 SMII_PWR
RADIO_ON
LCD_RESET_L
R369 100K 5% 1/32W MF 01005
R28 100K 5% 1/32W MF 01005
PP3V0_IO
R68 1.00M 1% 1/32W MF 01005
U52
H3P
FBGA
256MB-DDR-FC
SYMBOL 7 OF 9
NOSTUFF
DOCK UART0_TXD Y27 UART0_TXD
UART0_RXD V27 UART0_RXD
BB UART1_TXD U1 UART1_TXD
UART1_RXD Y2 UART1_RXD
UART1_RTS_L V1 UART1_RTSN
UART1_CTS_L Y1 UART1_CTSN
UMTS UART2_TXD V5 UART2_TXD
UART2_RXD W5 UART2_RXD
NC V10 UART2_RTSN
NC V9 UART2_CTSN
BT UART3_TXD R3 UART3_TXD
UART3_RXD P3 UART3_RXD
UART3_RTS_L R1 UART3_RTSN
UART3_CTS_L AD5 UART3_CTSN
GPS UART4_TXD AD2 UART4_TXD
UART4_RXD AD6 UART4_RXD
UART4_RTS_L W4 UART4_RTSN
UART4_CTS_L AD1 UART4_CTSN
UART5_RTXD V8 BATTERY_SWI GAS GAUGE
UART6_TXD AC5 UART6_TXD HIGHLANDPARK
UART6_RXD AC6 UART6_RXD
UART6_RTSN AC3 NC
UART6_CTSN AC4 NC
BOARD_REV[3:0]={EHCI_PORT_PWR2,EHCI_PORT_PWR1,EHCI_PORT_PWR0,SMII_PWR}
1111 PROTO0
1110 PROTO1
1101 PROTO2
1100 EVT1
1011 EVT2
1010 EVT2 COMPBUTTON
1001 DVT <---SELECTED
EHCI_PORT_PWR2 R27 0.00 01005 PP1V8
EHCI_PORT_PWR1 NOSTUFF R8 0.00 01005
EHCI_PORT_PWR0 NOSTUFF R29 0.00 01005
SMII_PWR R15 0.00 01005
BOARD_ID[0:2]={SPI0_SCLK,SPI0_MOSI,SPI0_MISO}
000 N90 MLB <---SELECTED
100 N90 DEV
010 XXX AP
110 XXX DEV
001 XXX AP
101 XXX DEV
NOTE: NO COMPONENTS REQIORED!
FLOAT=LOW, PULLUP=HIGH
BOOT_CONFIG[3:0]={GPIO29_CONFIG3,GPIO28_CONFIG2,GPIO25_CONFIG1,CODEC_INT_L}
0000 SPI0
0001 SPI3
0010 SPI0 W/TEST
0011 SPI3 W/TEST
0100 FMI0 2CS
0101 FMI0 4CS
0110 FMI0 4CS W/TEST
0111 RESERVED
1000 FMI1 2 CS
1001 FMI1 4 CS
1010 FMI1 4CS W/TEST
1100 FMI0/1 2/2 CS
1101 FMI0/1 4/4 CS <------SELECTED
1110 FMI0/1 4/4 CS W/TEST
1111 RESERVED
GPIO29_CONFIG3 R362 10K 01005 PP1V8
GPIO28_CONFIG2 R103 10K 01005
CODEC_INT_L R104 10K 01005
U52
H3P
FBGA
256MB-DDR-FC
SYMBOL 5 OF 9
NOSTUFF
WLAN_SDIO_DATA<3:0> J24 SDIO0_DATA0
J25 SDIO0_DATA1
J26 SDIO0_DATA2
J27 SDIO0_DATA3
WLAN_SDIO_CMD K25 SDIO0_CMD
WLAN_SDIO_CLK J21 SDIO0_CLK
V4 SPI0_SCLK
W7 SPI0_MOSI
V6 SPI0_MISO
W3 SPI0_SSIN
SPI1_SCLK V3 SPI1_SCLK
SPI1_MOSI W8 SPI1_MOSI
SPI1_MISO U2 SPI1_MISO
SPI1_CS_L V2 SPI1_SSIN
SPI2_SCLK AA2 SPI2_SCLK
SPI2_MOSI AA1 SPI2_MOSI
SPI2_MISO V7 SPI2_MISO
SPI2_MRDY W6 SPI2_SSIN
I2S0_DIN W21 I2S0_DIN
I2S0_DOUT W22 I2S0_DOUT
I2S0_BCLK V23 I2S0_BCLK
I2S0_LRCK V18 I2S0_LRCLK
I2S0_MCK V20 I2S0_MCK
I2S1_DIN V24 I2S1_DIN
I2S1_DOUT W19 I2S1_DOUT
I2S1_BCLK V25 I2S1_BCLK
I2S1_LRCK V15 I2S1_LRCLK
I2S1_MCK AB22 I2S1_MCK
I2S2_DIN R17 I2S2_DIN
I2S2_DOUT R16 I2S2_DOUT
I2S2_BCLK Y26 I2S2_BCLK
I2S2_LRCK AB23 I2S2_LRCLK
I2S2_MCK W23 I2S2_MCLK
I2C0_SDA AB6
I2C0_SCL AB5
I2C1_SDA AB4
I2C1_SCL AB3
I2C2_SDA AD15
I2C2_SCL AC15
** BACKUP IN CASE I2S0_MCK DOES NOT WORK
L61HP_CLK_PWM R89 0.00 0% 1/32W MF 01005 NOSTUFF
R36 33.2 1% 1/32W MF 01005
I2S0_MCK_R
3K3 ON R419 REDUCES CAMERA NOISE
PP1V8
R87 1.00K 5% 1/32W MF 01005
R88 1.00K 5% 1/32W MF 01005
R419 3.3K 5% 1/32W MF 01005
R424 1.00K 5% 1/32W MF 01005
R77 1.00K 5% 1/32W MF 01005
R75 1.00K 5% 1/32W MF 01005
I2C0_SDA_1V8
I2C0_SCL_1V8
I2C1_SDA_1V8
I2C1_SCL_1V8
I2C2_SDA_1V8
I2C2_SCL_1V8
PP1 P4MM SM
PP2 P4MM SM

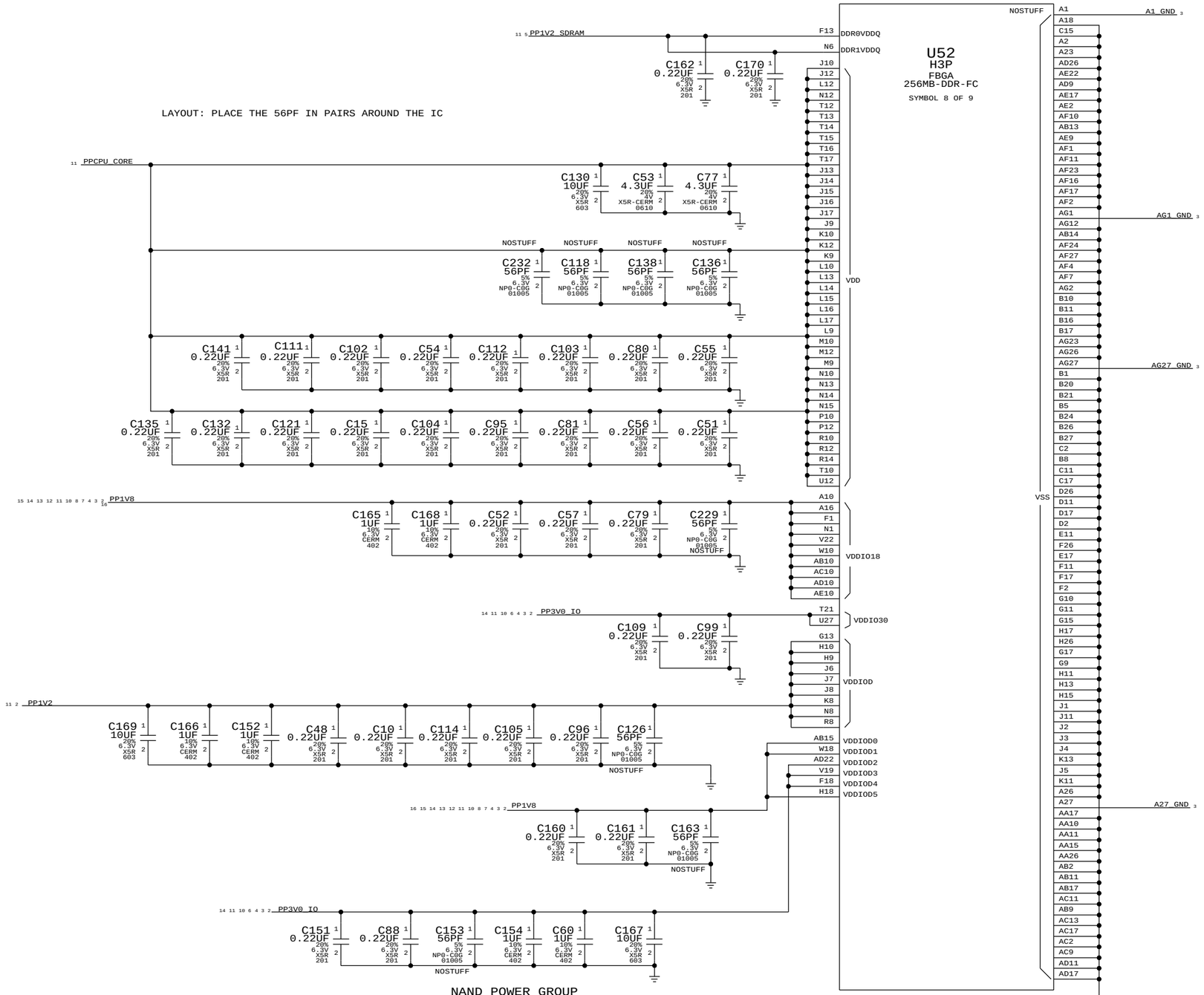
U52
H3P
FBGA
256MB-DDR-FC
SYMBOL 8 OF 9
LAYOUT: PLACE THE 56PF IN PAIRS AROUND THE IC
PP1V2_SDRAM
DDR0VDDQ
DDR1VDDQ
PPCPU_CORE
VDD
PP1V8
VDDIO18
PP3V0_IO
VDDIO30
VDDIOD
PP1V2
VDDIOD0
VDDIOD1
VDDIOD2
VDDIOD3
VDDIOD4
VDDIOD5
VSS
NOSTUFF
A1_GND
AG1_GND
AG27_GND
A27_GND
NAND POWER GROUP

PLACE THE 56PF IN PAIRS AROUND THE IC

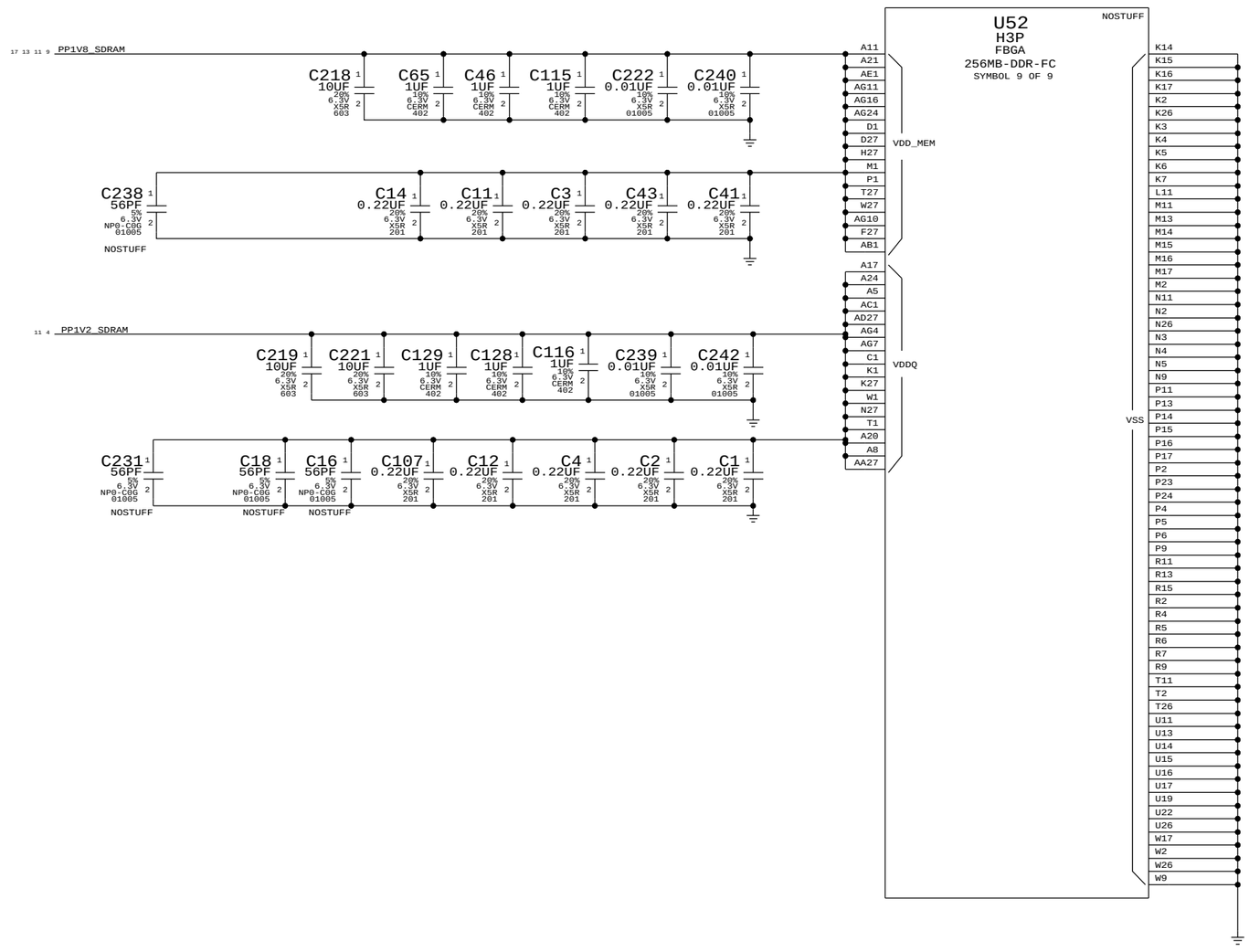

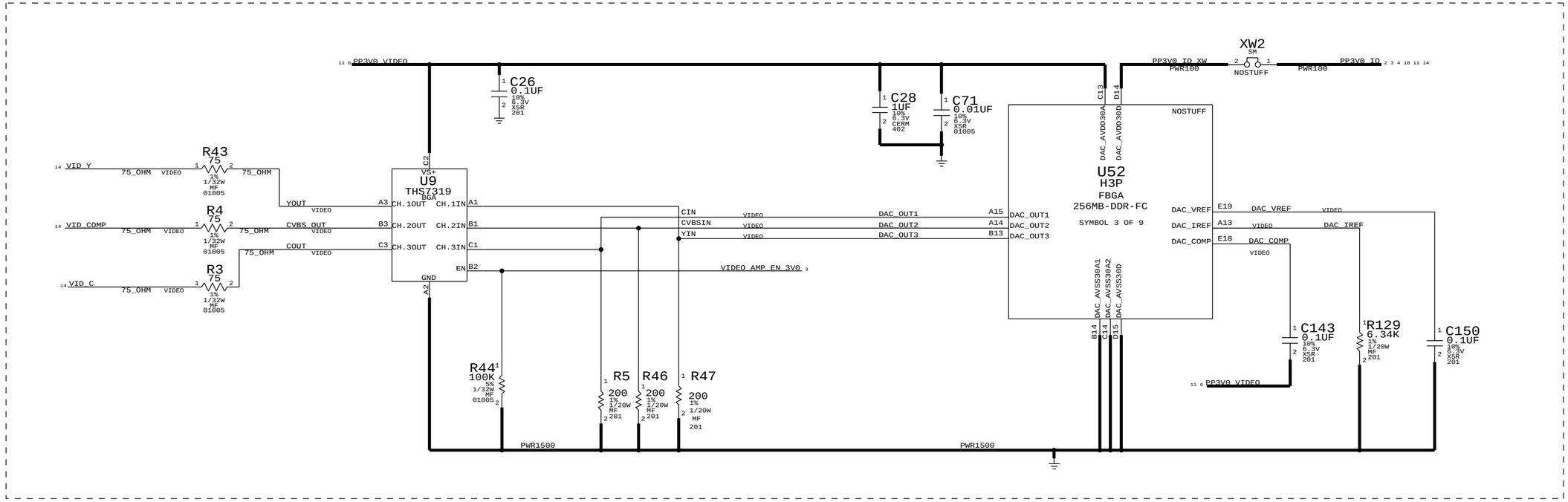
PP3V0_VIDEO
C26 0.1UF 10% 6.3V X5R 201
C28 1UF 10% 6.3V CERM 402
C71 0.01UF 10% 6.3V X5R 01005
XW2 SM NOSTUFF
PP3V0_IO_XW PWR100
PP3V0_IO PWR100
R43 75 1% 1/32W MF 01005
R4 75 1% 1/32W MF 01005
R3 75 1% 1/32W MF 01005
VID_Y
VID_COMP
VID_C
75_OHM VIDEO
YOUT
CVBS_OUT
COUT
U9 THS7319 BGA
VS+ CH.1OUT CH.1IN CH.2OUT CH.2IN CH.3OUT CH.3IN EN GND
CIN CVBSIN YIN
VIDEO_AMP_EN_3V0
DAC_OUT1 DAC_OUT2 DAC_OUT3
U52 H3P FBGA 256MB-DDR-FC SYMBOL 3 OF 9
NOSTUFF
DAC_AVDD30A DAC_AVDD30D DAC_AVSS30A1 DAC_AVSS30A2 DAC_AVSS30D
DAC_VREF DAC_IREF DAC_COMP
C143 0.1UF 10% 6.3V X5R 201
R129 6.34K 1% 1/20W MF 201
C150 0.1UF 10% 6.3V X5R 201
R44 100K 5% 1/32W MF 01005
R5 200 1% 1/20W MF 201
R46 200 1% 1/20W MF 201
R47 200 1% 1/20W MF 201
PWR1500

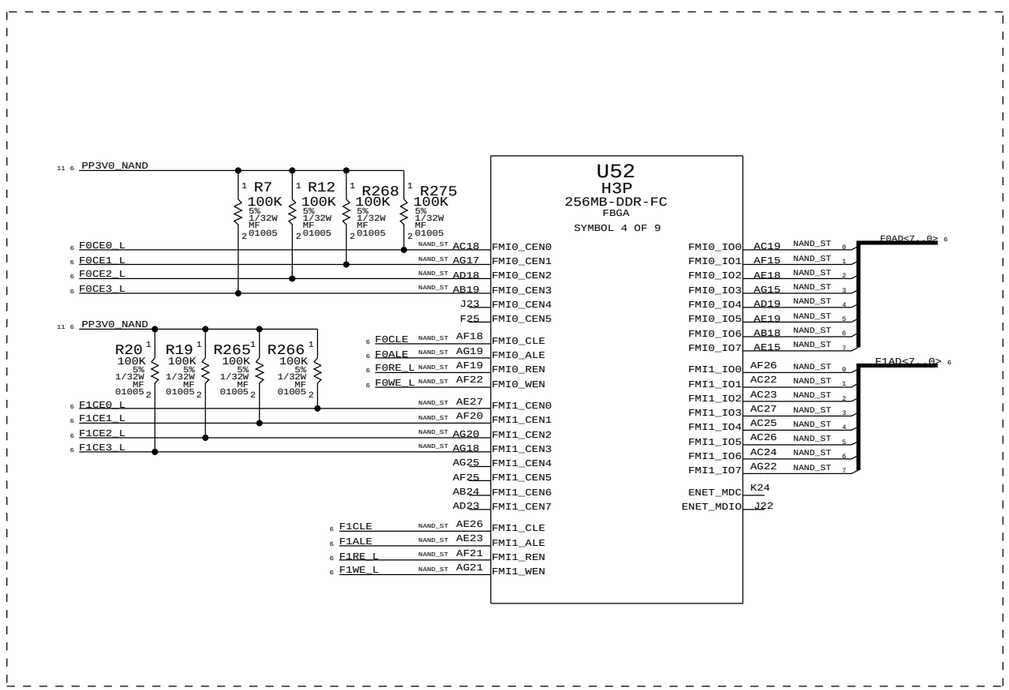
PP3V0_NAND
R7 100K 5% 1/32W MF 01005
R12 100K 5% 1/32W MF 01005
R268 100K 5% 1/32W MF 01005
R275 100K 5% 1/32W MF 01005
F0CE0_L F0CE1_L F0CE2_L F0CE3_L
R20 100K 5% 1/32W MF 01005
R19 100K 5% 1/32W MF 01005
R265 100K 5% 1/32W MF 01005
R266 100K 5% 1/32W MF 01005
F1CE0_L F1CE1_L F1CE2_L F1CE3_L
F0CLE F0ALE F0RE_L F0WE_L
F1CLE F1ALE F1RE_L F1WE_L
U52 H3P 256MB-DDR-FC FBGA SYMBOL 4 OF 9
FMI0_CEN0 FMI0_CEN1 FMI0_CEN2 FMI0_CEN3 FMI0_CEN4 FMI0_CEN5 FMI0_CLE FMI0_ALE FMI0_REN FMI0_WEN
FMI1_CEN0 FMI1_CEN1 FMI1_CEN2 FMI1_CEN3 FMI1_CEN4 FMI1_CEN5 FMI1_CEN6 FMI1_CEN7 FMI1_CLE FMI1_ALE FMI1_REN FMI1_WEN
FMI0_IO0 FMI0_IO1 FMI0_IO2 FMI0_IO3 FMI0_IO4 FMI0_IO5 FMI0_IO6 FMI0_IO7
FMI1_IO0 FMI1_IO1 FMI1_IO2 FMI1_IO3 FMI1_IO4 FMI1_IO5 FMI1_IO6 FMI1_IO7
ENET_MDC ENET_MDIO
F0AD<7_0> F1AD<7_0>

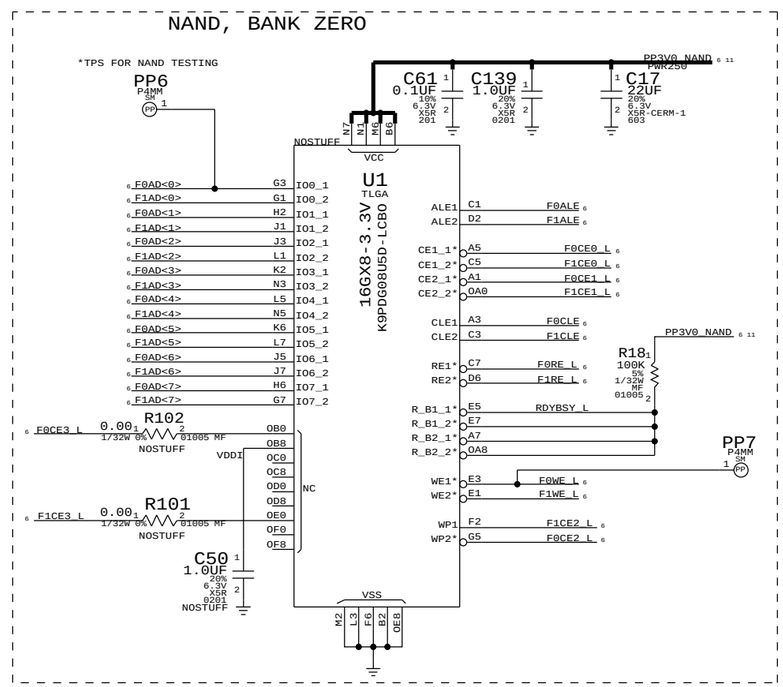
NAND, BANK ZERO
*TPS FOR NAND TESTING
PP6 P4MM SM
PP3V0_NAND PWR250
C61 0.1UF 10% 6.3V X5R 201
C139 1.0UF 20% 6.3V X5R 0201
C17 22UF 20% 6.3V X5R-CERM-1 603
NOSTUFF
VCC
U1 TLGA 16GX8-3.3V K9PDG08U5D-LCB0
F0AD<0> F1AD<0> F0AD<1> F1AD<1> F0AD<2> F1AD<2> F0AD<3> F1AD<3> F0AD<4> F1AD<4> F0AD<5> F1AD<5> F0AD<6> F1AD<6> F0AD<7> F1AD<7>
ALE1 ALE2 CE1_1* CE1_2* CE2_1* CE2_2* CLE1 CLE2 RE1* RE2* R_B1_1* R_B1_2* R_B2_1* R_B2_2* WE1* WE2* WP1 WP2*
F0ALE F1ALE F0CE0_L F1CE0_L F0CE1_L F1CE1_L F0CLE F1CLE F0RE_L F1RE_L RDYBSY_L F0WE_L F1WE_L F1CE2_L F0CE2_L
R18 100K 5% 1/32W MF 01005
PP3V0_NAND
PP7 P4MM SM
R102 0.00 1% 1/32W 0% 01005 MF NOSTUFF
R101 0.00 1% 1/32W 0% 01005 MF NOSTUFF
F0CE3_L F1CE3_L
VDDI
NC
C50 1.0UF 20% 6.3V X5R 0201 NOSTUFF
VSS

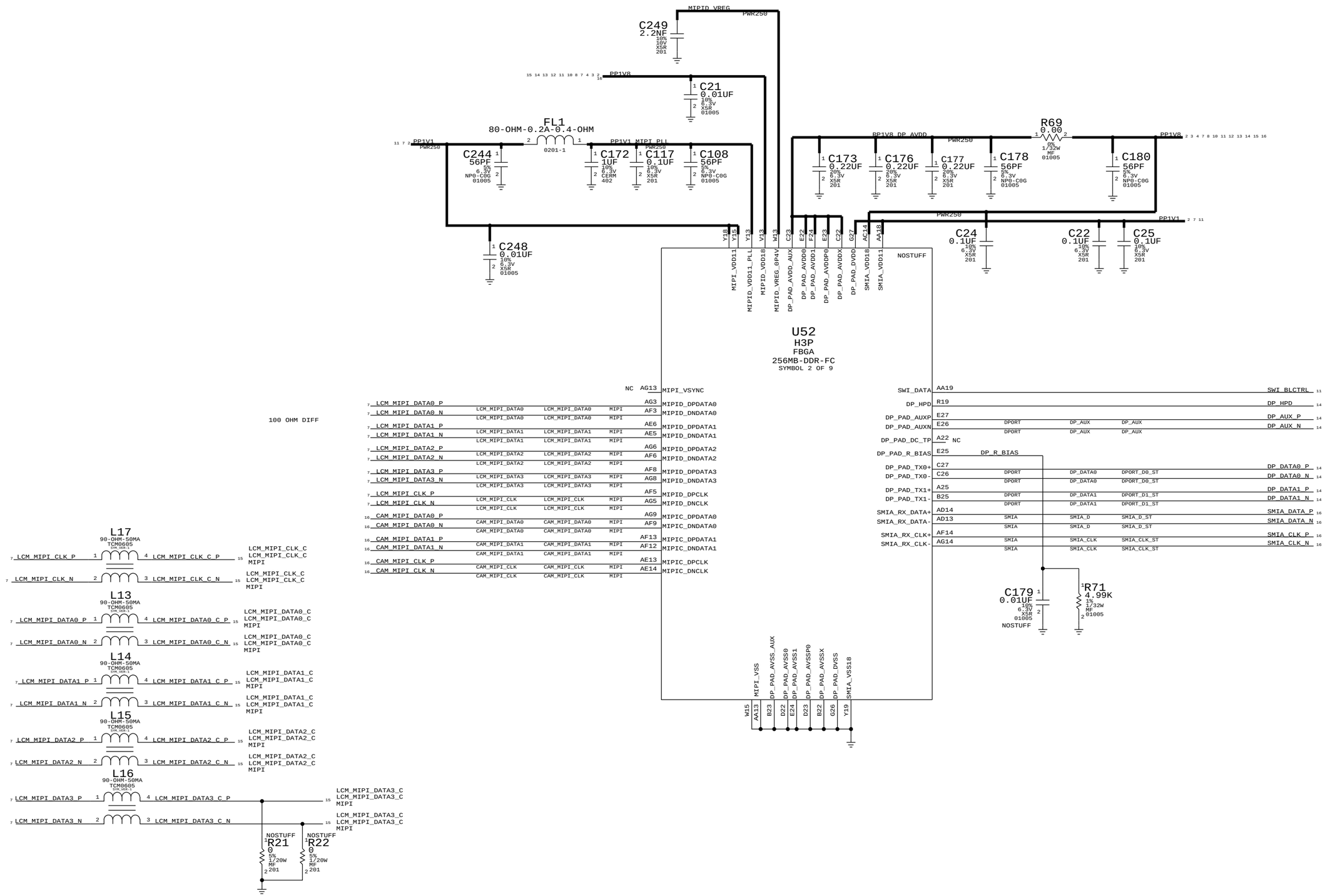
C249 2.2NF 10% 10V X5R 201
MIPID_VREG
PWR250
C21 0.01UF 10% 6.3V X5R 01005
PP1V8
FL1 80-OHM-0.2A-0.4-OHM 0201-1
PP1V1
PP1V1_MIPI_PLL
C244 56PF 5% 6.3V NP0-C0G 01005
C172 1UF 10% 6.3V CERM 402
C117 0.1UF 10% 6.3V X5R 201
C108 56PF 5% 6.3V NP0-C0G 01005
C248 0.01UF 10% 6.3V X5R 01005
PP1V8_DP_AVDD
C173 0.22UF 20% 6.3V X5R 201
C176 0.22UF 20% 6.3V X5R 201
C177 0.22UF 20% 6.3V X5R 201
C178 56PF 5% 6.3V NP0-C0G 01005
R69 0.00 5% 1/32W MF 01005
C180 56PF 5% 6.3V NP0-C0G 01005
C24 0.1UF 10% 6.3V X5R 201
C22 0.1UF 10% 6.3V X5R 201
C25 0.1UF 10% 6.3V X5R 201
NOSTUFF
U52
H3P
FBGA
256MB-DDR-FC
SYMBOL 2 OF 9
MIPI_VDD11
MIPID_VDD11_PLL
MIPID_VDD18
MIPID_VREG_0P4V
DP_PAD_AVDD_AUX
DP_PAD_AVDD0
DP_PAD_AVDD1
DP_PAD_AVDDP0
DP_PAD_AVDDX
DP_PAD_DVDD
SMIA_VDD18
SMIA_VDD11
NC AG13 MIPI_VSYNC
AG3 MIPID_DPDATA0
AF3 MIPID_DNDATA0
AE6 MIPID_DPDATA1
AE5 MIPID_DNDATA1
AG6 MIPID_DPDATA2
AF6 MIPID_DNDATA2
AF8 MIPID_DPDATA3
AG8 MIPID_DNDATA3
AF5 MIPID_DPCLK
AG5 MIPID_DNCLK
AG9 MIPIC_DPDATA0
AF9 MIPIC_DNDATA0
AF13 MIPIC_DPDATA1
AF12 MIPIC_DNDATA1
AE13 MIPIC_DPCLK
AE14 MIPIC_DNCLK
100 OHM DIFF
LCM_MIPI_DATA0_P
LCM_MIPI_DATA0_N
LCM_MIPI_DATA1_P
LCM_MIPI_DATA1_N
LCM_MIPI_DATA2_P
LCM_MIPI_DATA2_N
LCM_MIPI_DATA3_P
LCM_MIPI_DATA3_N
LCM_MIPI_CLK_P
LCM_MIPI_CLK_N
CAM_MIPI_DATA0_P
CAM_MIPI_DATA0_N
CAM_MIPI_DATA1_P
CAM_MIPI_DATA1_N
CAM_MIPI_CLK_P
CAM_MIPI_CLK_N
MIPI
SWI_DATA AA19 SWI_BLCTRL
DP_HPD R19 DP_HPD
DP_PAD_AUXP E27 DP_AUX_P
DP_PAD_AUXN E26 DP_AUX_N
DPORT DP_AUX
DP_PAD_DC_TP A22 NC
DP_PAD_R_BIAS E25 DP_R_BIAS
DP_PAD_TX0+ C27 DP_DATA0_P
DP_PAD_TX0- C26 DP_DATA0_N
DP_PAD_TX1+ A25 DP_DATA1_P
DP_PAD_TX1- B25 DP_DATA1_N
DPORT_D0_ST
DPORT_D1_ST
SMIA_RX_DATA+ AD14 SMIA_DATA_P
SMIA_RX_DATA- AD13 SMIA_DATA_N
SMIA_RX_CLK+ AF14 SMIA_CLK_P
SMIA_RX_CLK- AG14 SMIA_CLK_N
SMIA
SMIA_D
SMIA_D_ST
SMIA_CLK
SMIA_CLK_ST
C179 0.01UF 10% 6.3V X5R 01005 NOSTUFF
R71 4.99K 1% 1/32W MF 01005
MIPI_VSS
DP_PAD_AVSS_AUX
DP_PAD_AVSS0
DP_PAD_AVSS1
DP_PAD_AVSSP0
DP_PAD_AVSSX
DP_PAD_DVSS
SMIA_VSS18
L17 90-OHM-50MA TCM0605
LCM_MIPI_CLK_P
LCM_MIPI_CLK_N
LCM_MIPI_CLK_C_P
LCM_MIPI_CLK_C_N
L13 90-OHM-50MA TCM0605
LCM_MIPI_DATA0_P
LCM_MIPI_DATA0_N
LCM_MIPI_DATA0_C_P
LCM_MIPI_DATA0_C_N
L14 90-OHM-50MA TCM0605
LCM_MIPI_DATA1_P
LCM_MIPI_DATA1_N
LCM_MIPI_DATA1_C_P
LCM_MIPI_DATA1_C_N
L15 90-OHM-50MA TCM0605
LCM_MIPI_DATA2_P
LCM_MIPI_DATA2_N
LCM_MIPI_DATA2_C_P
LCM_MIPI_DATA2_C_N
L16 90-OHM-50MA TCM0605
LCM_MIPI_DATA3_P
LCM_MIPI_DATA3_N
LCM_MIPI_DATA3_C_P
LCM_MIPI_DATA3_C_N
NOSTUFF R21 0 5% 1/20W MF 201
NOSTUFF R22 0 5% 1/20W MF 201

L61 AUDIO INTERFACE

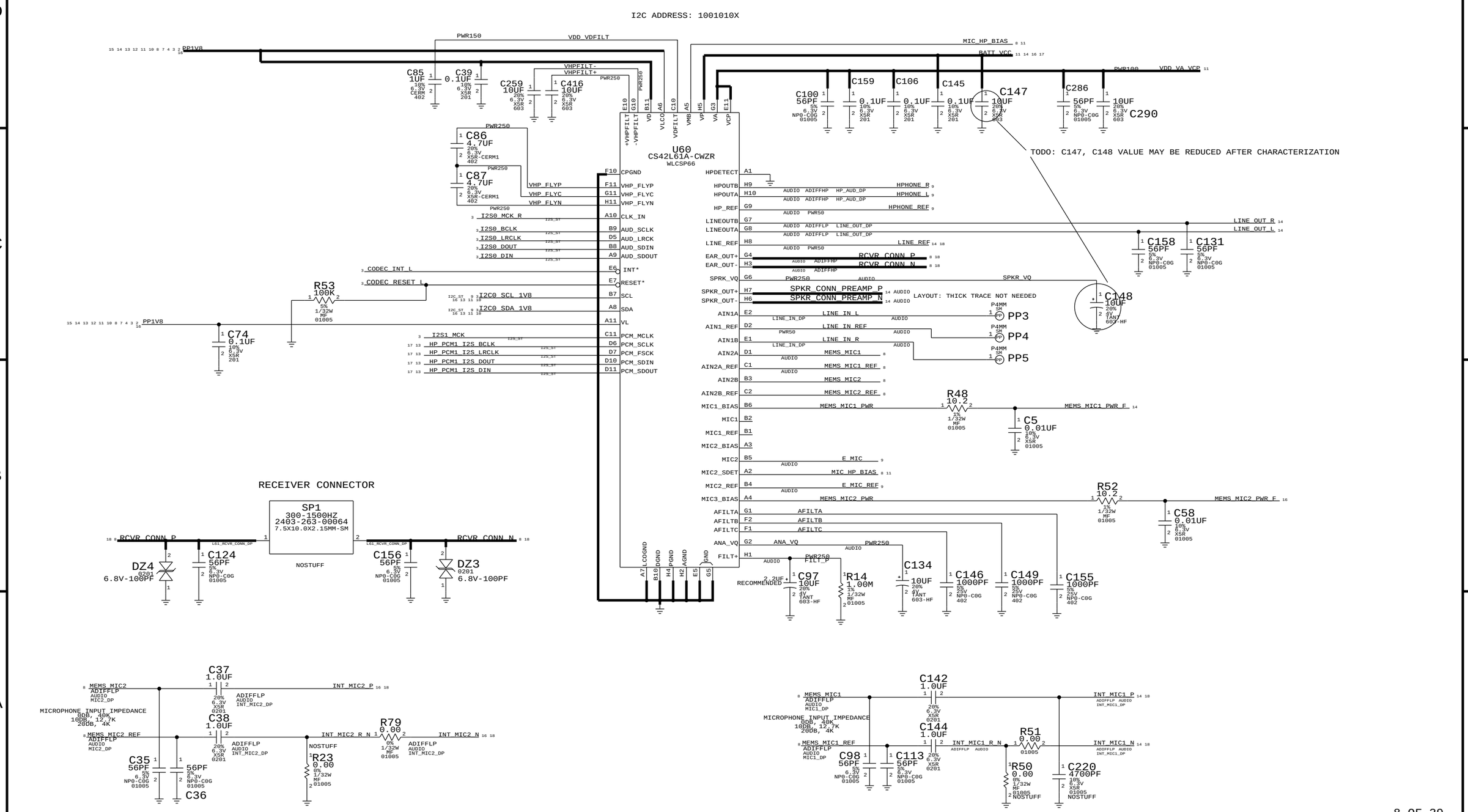

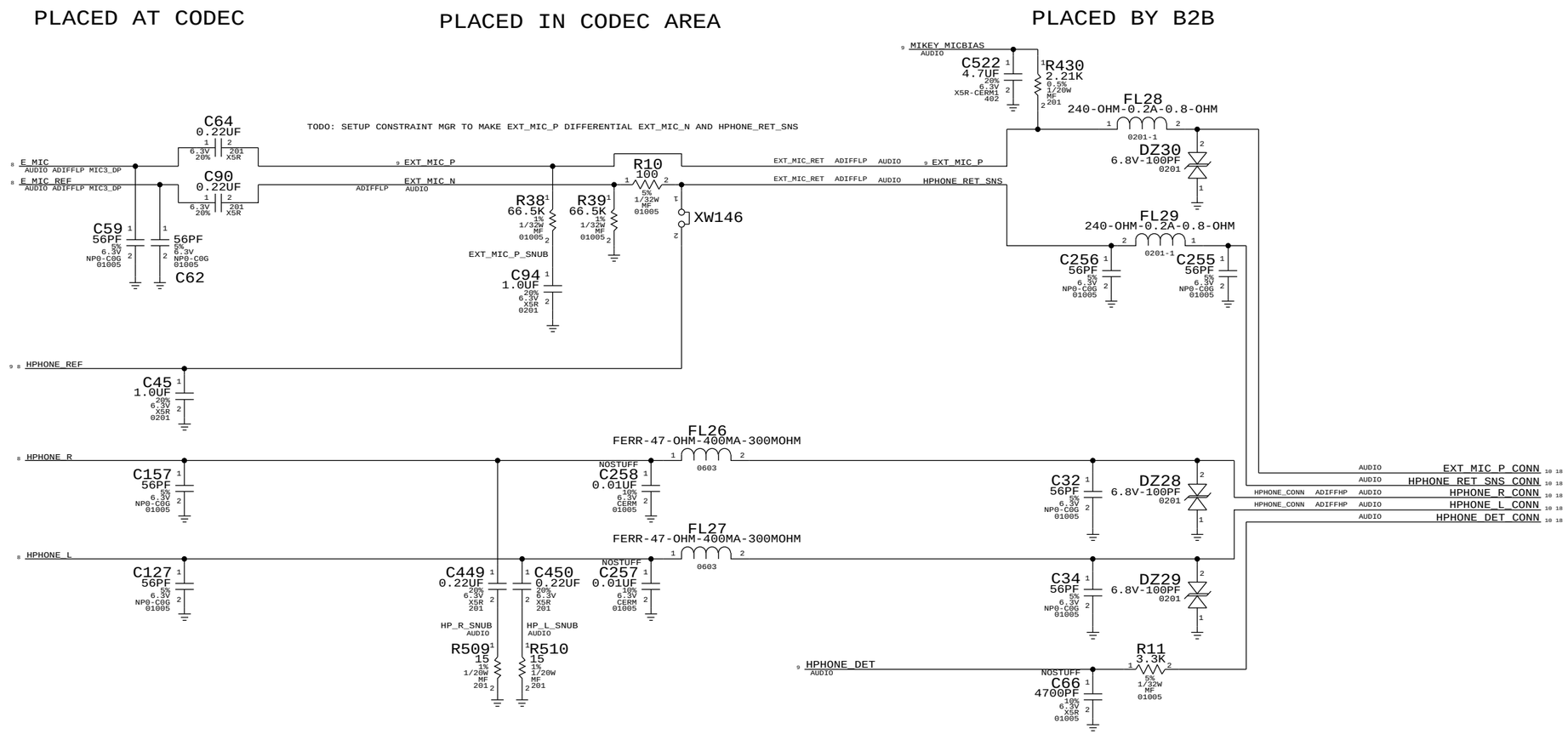

I2C ADDRESS: 0111001X (0X39)

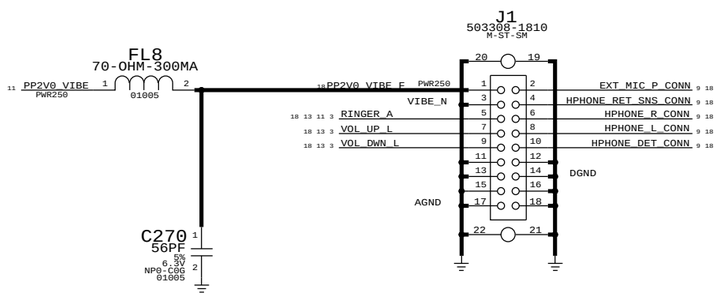

BUTTON FLEX CONNECTOR

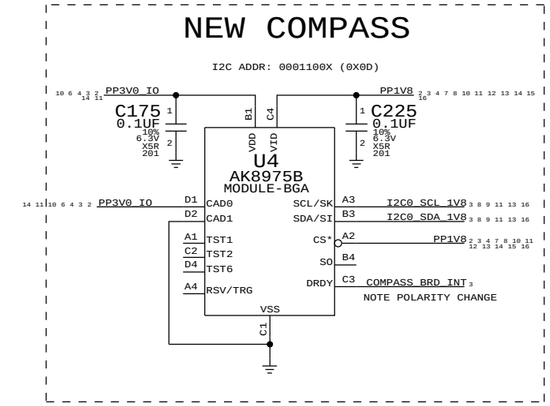

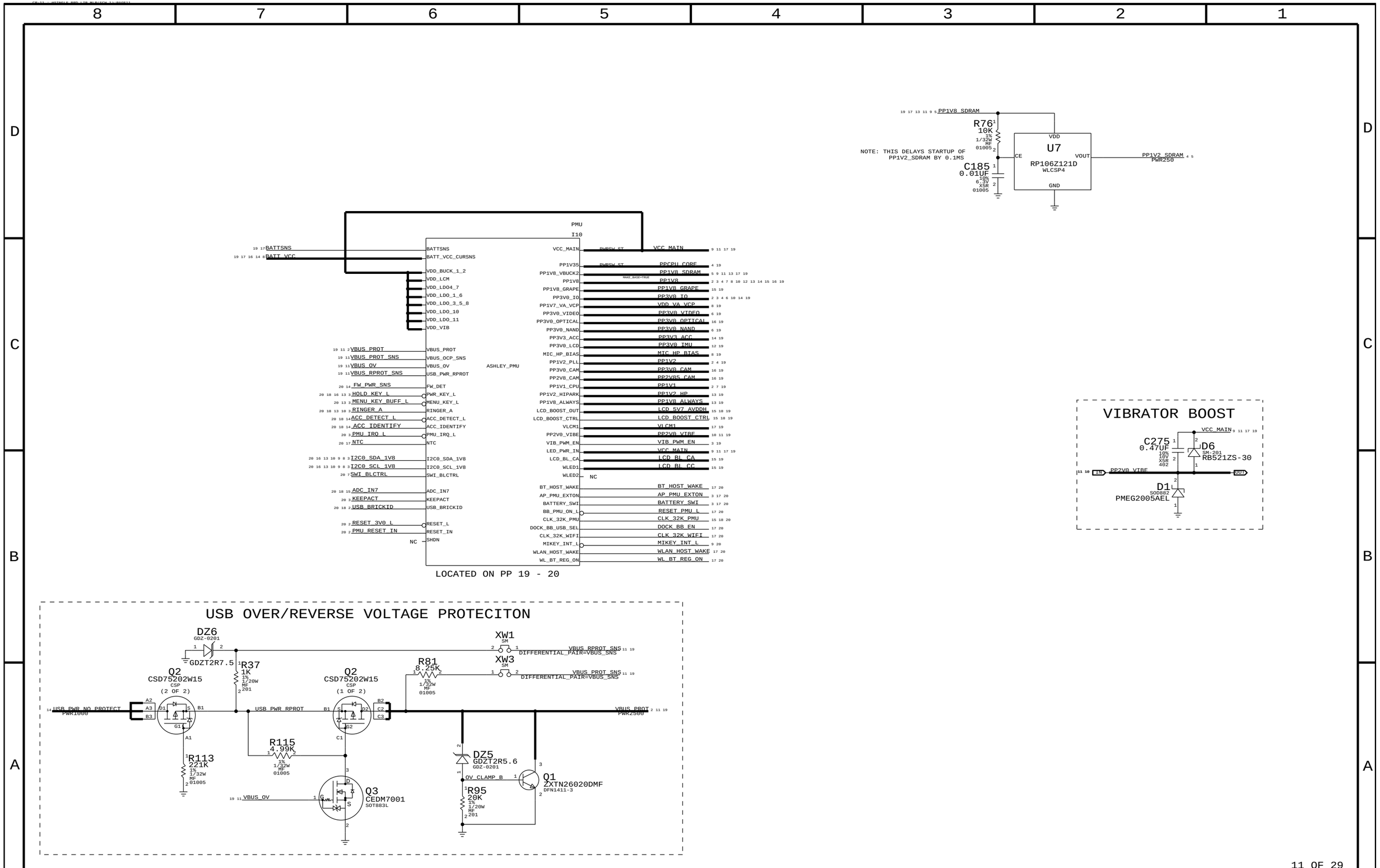
PP1V8_SDRAM
R76
10K
1%
1/32W
MF
01005
NOTE: THIS DELAYS STARTUP OF
PP1V2_SDRAM BY 0.1MS
C185
0.01UF
10%
6.3V
X5R
01005
VDD
U7
CE
VOUT
RP106Z121D
WLCSP4
GND
PP1V2_SDRAM
PWR250
PMU
I10
BATTSNS
BATT_VCC
BATT_VCC_CURSNS
VDD_BUCK_1_2
VDD_LCM
VDD_LDO4_7
VDD_LDO_1_6
VDD_LDO_3_5_8
VDD_LDO_10
VDD_LDO_11
VDD_VIB
VBUS_PROT
VBUS_PROT_SNS
VBUS_OV
VBUS_RPROT_SNS
FW_PWR_SNS
HOLD_KEY_L
MENU_KEY_BUFF_L
RINGER_A
ACC_DETECT_L
ACC_IDENTIFY
PMU_IRQ_L
NTC
I2C0_SDA_1V8
I2C0_SCL_1V8
SWI_BLCTRL
ADC_IN7
KEEPACT
USB_BRICKID
RESET_3V0_L
PMU_RESET_IN
NC
VBUS_PROT
VBUS_OCP_SNS
VBUS_OV
USB_PWR_RPROT
FW_DET
PWR_KEY_L
MENU_KEY_L
RINGER_A
ACC_DETECT_L
ACC_IDENTIFY
PMU_IRQ_L
NTC
I2C0_SDA_1V8
I2C0_SCL_1V8
SWI_BLCTRL
ADC_IN7
KEEPACT
USB_BRICKID
RESET_L
RESET_IN
SHDN
ASHLEY_PMU
VCC_MAIN
PP1V35
PP1V8_VBUCK2
PP1V8
PP1V8_GRAPE
PP3V0_IO
PP1V7_VA_VCP
PP3V0_VIDEO
PP3V0_OPTICAL
PP3V0_NAND
PP3V3_ACC
PP3V0_LCD
MIC_HP_BIAS
PP1V2_PLL
PP3V0_CAM
PP2V8_CAM
PP1V1_CPU
PP1V2_HIPARK
PP1V8_ALWAYS
LCD_BOOST_OUT
LCD_BOOST_CTRL
VLCM1
PP2V0_VIBE
VIB_PWM_EN
LED_PWR_IN
LCD_BL_CA
WLED1
WLED2
NC
BT_HOST_WAKE
AP_PMU_EXTON
BATTERY_SWI
BB_PMU_ON_L
CLK_32K_PMU
DOCK_BB_USB_SEL
CLK_32K_WIFI
MIKEY_INT_L
WLAN_HOST_WAKE
WL_BT_REG_ON
PWRSW_ST
VCC_MAIN
PPCPU_CORE
PP1V8_SDRAM
PP1V8
PP1V8_GRAPE
PP3V0_IO
VDD_VA_VCP
PP3V0_VIDEO
PP3V0_OPTICAL
PP3V0_NAND
PP3V3_ACC
PP3V0_IMU
MIC_HP_BIAS
PP1V2
PP3V0_CAM
PP2V85_CAM
PP1V1
PP1V2_HP
PP1V8_ALWAYS
LCD_5V7_AVDDH
LCD_BOOST_CTRL
VLCM1
PP2V0_VIBE
VIB_PWM_EN
VCC_MAIN
LCD_BL_CA
LCD_BL_CC
BT_HOST_WAKE
AP_PMU_EXTON
BATTERY_SWI
RESET_PMU_L
CLK_32K_PMU
DOCK_BB_EN
CLK_32K_WIFI
MIKEY_INT_L
WLAN_HOST_WAKE
WL_BT_REG_ON
LOCATED ON PP 19 - 20
VIBRATOR BOOST
VCC_MAIN
C275
0.47UF
10%
10V
X5R
402
D6
SM-201
RB521ZS-30
IN
PP2V0_VIBE
OUT
D1
SOD882
PMEG2005AEL
USB OVER/REVERSE VOLTAGE PROTECITON
DZ6
GDZ-0201
GDZT2R7.5
XW1
SM
VBUS_RPROT_SNS
DIFFERENTIAL_PAIR=VBUS_SNS
XW3
SM
VBUS_PROT_SNS
DIFFERENTIAL_PAIR=VBUS_SNS
R37
1K
1%
1/20W
MF
201
R81
8.25K
1%
1/32W
MF
01005
Q2
CSD75202W15
CSP
(2 OF 2)
Q2
CSD75202W15
CSP
(1 OF 2)
USB_PWR_NO_PROTECT
PWR1000
USB_PWR_RPROT
VBUS_PROT
PWR2500
R113
221K
1%
1/32W
MF
01005
R115
4.99K
1%
1/32W
MF
01005
DZ5
GDZT2R5.6
GDZ-0201
OV_CLAMP_B
Q1
ZXTN26020DMF
DFN1411-3
R95
20K
1%
1/20W
MF
201
VBUS_OV
Q3
CEDM7001
SOT883L

ACCELEROMETER

I2C ADDRESS: 0011101X (0X1D)

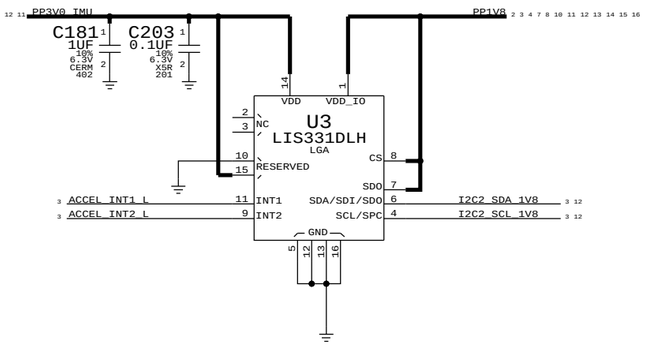

GYRO

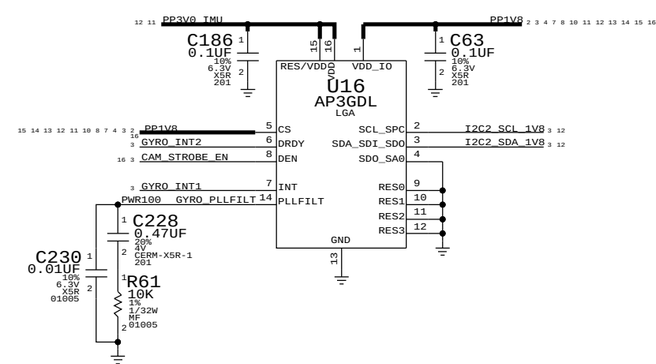

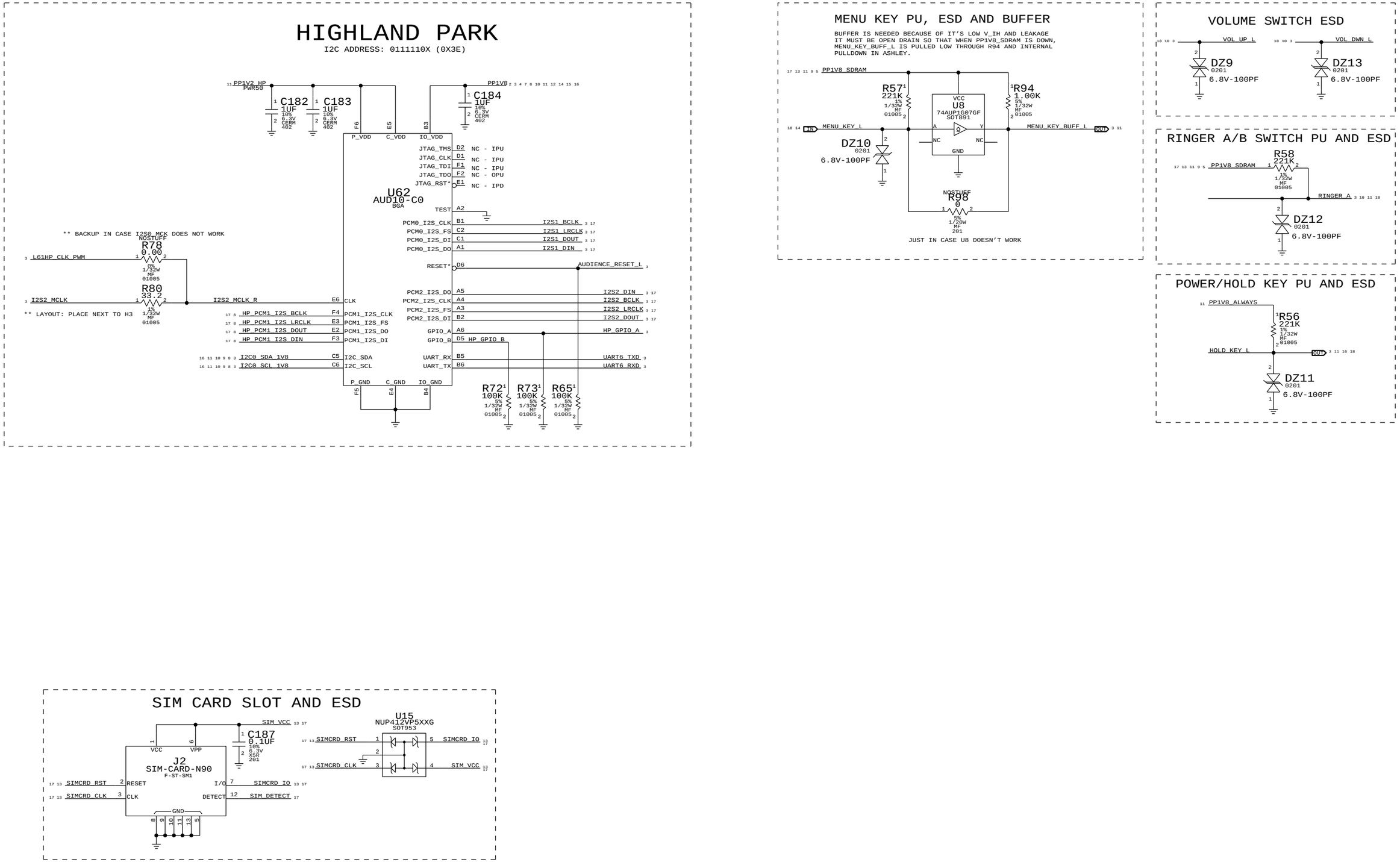
HIGHLAND PARK
I2C ADDRESS: 0111110X (0X3E)
PP1V2_HP
PWR50
C182 1UF 10% 6.3V CERM 402
C183 1UF 10% 6.3V CERM 402
PP1V8
C184 1UF 10% 6.3V CERM 402
P_VDD
C_VDD
IO_VDD
JTAG_TMS NC - IPU
JTAG_CLK NC - IPU
JTAG_TDI NC - IPU
JTAG_TDO NC - OPU
JTAG_RST* NC - IPD
U62
AUD10-C0
BGA
TEST
PCM0_I2S_CLK I2S1_BCLK
PCM0_I2S_FS I2S1_LRCLK
PCM0_I2S_DI I2S1_DOUT
PCM0_I2S_DO I2S1_DIN
** BACKUP IN CASE I2S0_MCK DOES NOT WORK
NOSTUFF
R78 0.00 5% 1/32W MF 01005
L61HP_CLK_PWM
R80 33.2 1% 1/32W MF 01005
I2S2_MCLK
** LAYOUT: PLACE NEXT TO H3
I2S2_MCLK_R
CLK
RESET*
AUDIENCE_RESET_L
PCM2_I2S_DO I2S2_DIN
PCM2_I2S_CLK I2S2_BCLK
PCM2_I2S_FS I2S2_LRCLK
PCM2_I2S_DI I2S2_DOUT
HP_PCM1_I2S_BCLK PCM1_I2S_CLK
HP_PCM1_I2S_LRCLK PCM1_I2S_FS
HP_PCM1_I2S_DOUT PCM1_I2S_DO
HP_PCM1_I2S_DIN PCM1_I2S_DI
GPIO_A HP_GPIO_A
GPIO_B HP_GPIO_B
I2C0_SDA_1V8 I2C_SDA
I2C0_SCL_1V8 I2C_SCL
UART_RX UART6_TXD
UART_TX UART6_RXD
P_GND
C_GND
IO_GND
R72 100K 5% 1/32W MF 01005
R73 100K 5% 1/32W MF 01005
R65 100K 5% 1/32W MF 01005
MENU KEY PU, ESD AND BUFFER
BUFFER IS NEEDED BECAUSE OF IT'S LOW V_IH AND LEAKAGE
IT MUST BE OPEN DRAIN SO THAT WHEN PP1V8_SDRAM IS DOWN,
MENU_KEY_BUFF_L IS PULLED LOW THROUGH R94 AND INTERNAL
PULLDOWN IN ASHLEY.
PP1V8_SDRAM
R57 221K 1% 1/32W MF 01005
R94 1.00K 5% 1/32W MF 01005
VCC
U8
74AUP1G07GF
SOT891
MENU_KEY_L
MENU_KEY_BUFF_L
DZ10 0201 6.8V-100PF
NC
GND
NOSTUFF
R98 0 5% 1/20W MF 201
JUST IN CASE U8 DOESN'T WORK
VOLUME SWITCH ESD
VOL_UP_L
VOL_DWN_L
DZ9 0201 6.8V-100PF
DZ13 0201 6.8V-100PF
RINGER A/B SWITCH PU AND ESD
R58 221K 1% 1/32W MF 01005
PP1V8_SDRAM
RINGER_A
DZ12 0201 6.8V-100PF
POWER/HOLD KEY PU AND ESD
PP1V8_ALWAYS
R56 221K 1% 1/32W MF 01005
HOLD_KEY_L
DZ11 0201 6.8V-100PF
SIM CARD SLOT AND ESD
SIM_VCC
C187 0.1UF 10% 6.3V X5R 201
U15
NUP412VP5XXG
SOT953
SIMCRD_RST
SIMCRD_CLK
SIMCRD_IO
SIM_VCC
J2
SIM-CARD-N90
F-ST-SM1
VCC
VPP
RESET
CLK
I/O
DETECT
SIM_DETECT
GND

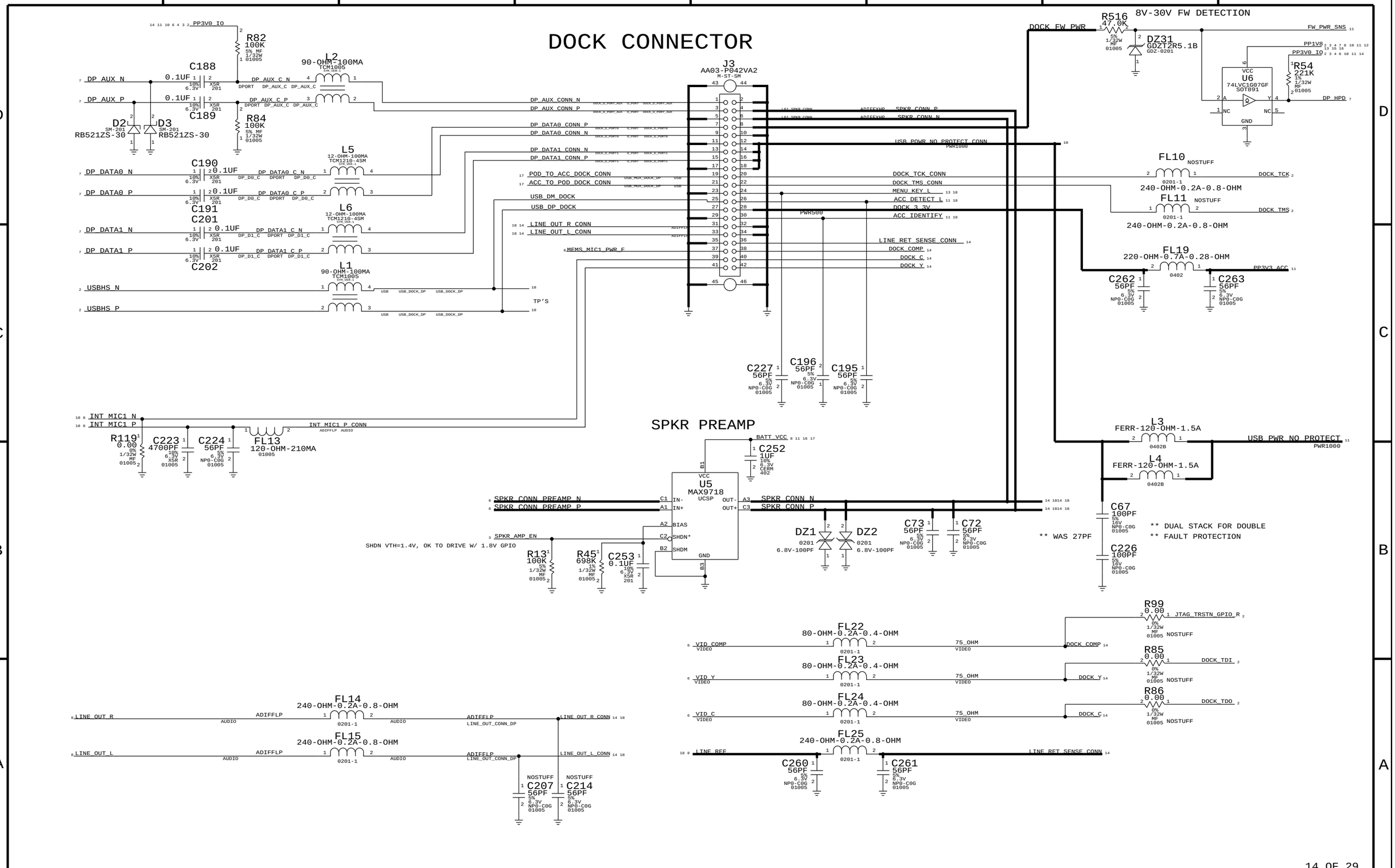
DOCK CONNECTOR
J3
AA03-P042VA2
M-ST-SM
8V-30V FW DETECTION
R516
47.0K
DZ31
GDZT2R5.1B
R54
221K
U6
74LVC1G07GF
SOT891
FL10
240-OHM-0.2A-0.8-OHM
FL11
240-OHM-0.2A-0.8-OHM
FL19
220-OHM-0.7A-0.28-OHM
C262
C263
L3
FERR-120-OHM-1.5A
L4
FERR-120-OHM-1.5A
C67
100PF
C226
100PF
** DUAL STACK FOR DOUBLE
** FAULT PROTECTION
** WAS 27PF
SPKR PREAMP
U5
MAX9718
UCSP
C252
1UF
DZ1
DZ2
C73
56PF
C72
56PF
R13
100K
R45
698K
C253
0.1UF
SHDN VTH=1.4V, OK TO DRIVE W/ 1.8V GPIO
R82
100K
L2
90-OHM-100MA
TCM1005
C188
0.1UF
C189
R84
100K
D2
RB521ZS-30
D3
RB521ZS-30
L5
12-OHM-100MA
TCM1210-4SM
C190
0.1UF
C191
C201
L6
12-OHM-100MA
TCM1210-4SM
C202
L1
90-OHM-100MA
TCM1005
C227
56PF
C196
56PF
C195
56PF
R119
0.00
C223
4700PF
C224
56PF
FL13
120-OHM-210MA
FL14
240-OHM-0.2A-0.8-OHM
FL15
240-OHM-0.2A-0.8-OHM
C207
56PF
C214
56PF
FL22
80-OHM-0.2A-0.4-OHM
FL23
80-OHM-0.2A-0.4-OHM
FL24
80-OHM-0.2A-0.4-OHM
FL25
240-OHM-0.2A-0.8-OHM
C260
56PF
C261
56PF
R99
0.00
R85
0.00
R86
0.00
NOSTUFF

NIMBUS

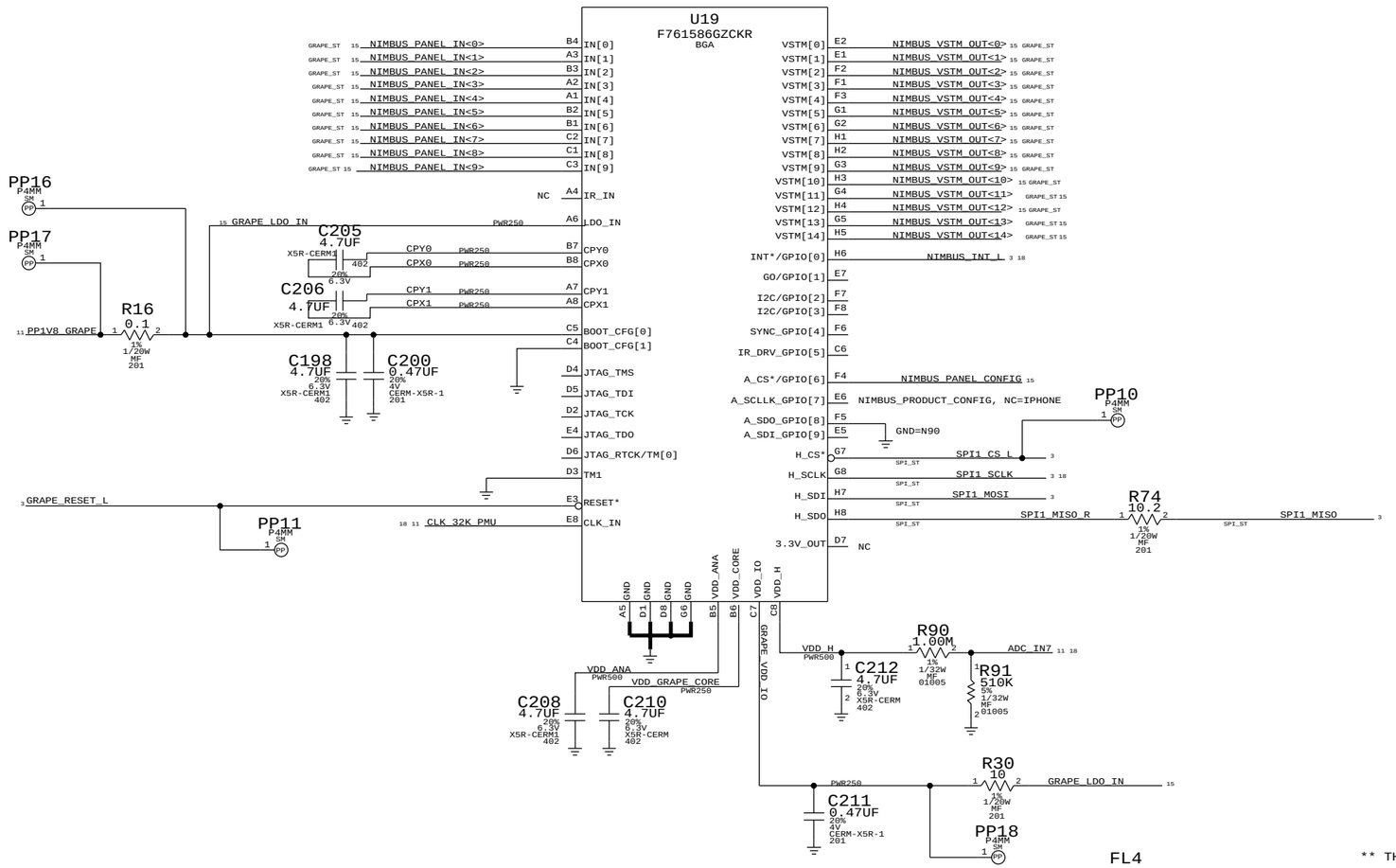

GRAPE CONNECTOR
N90 NIMBUS CONNECTOR

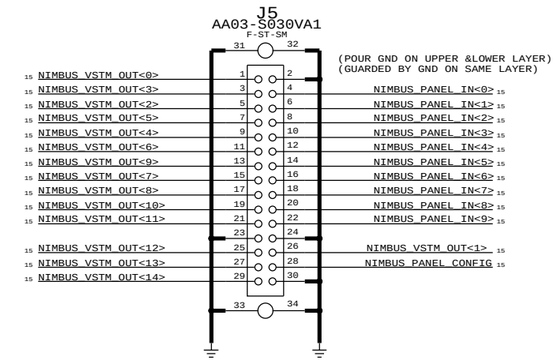

** THESE 10 CAPS ARE TO REPLACE 1 4.7 UF CAP IN ORDER TO REDUCE HEIGHT IN THE FORHEAD AREA

N90 LCD CONNECTOR

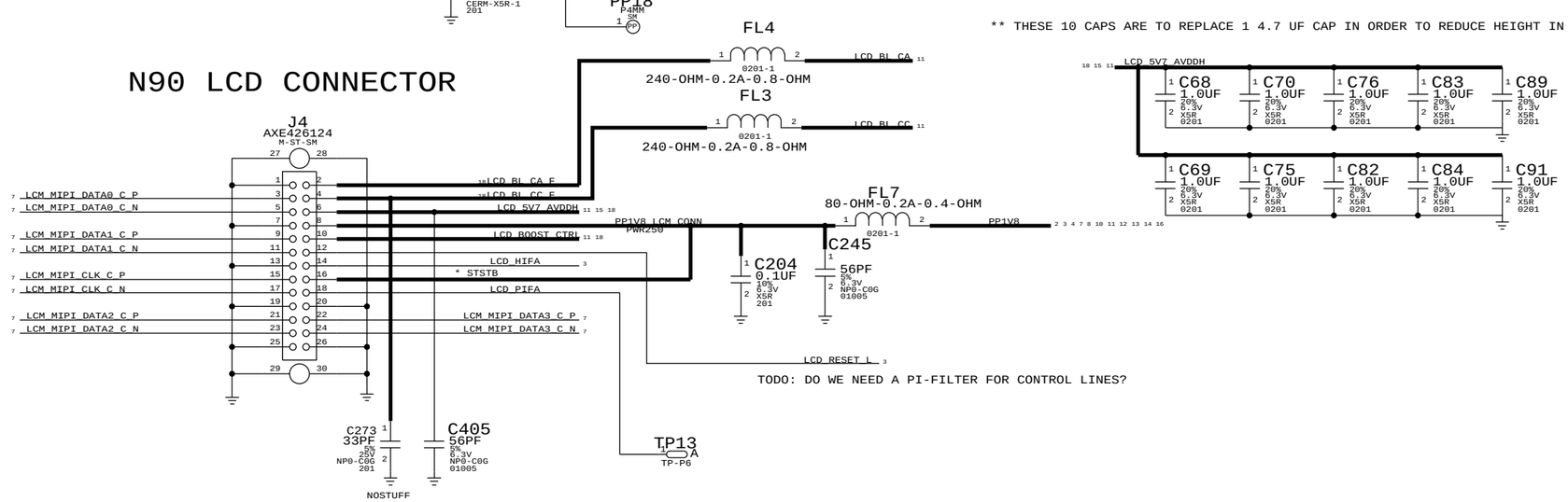

TODO: DO WE NEED A PI-FILTER FOR CONTROL LINES?

5MP CAMERA CONNECTOR

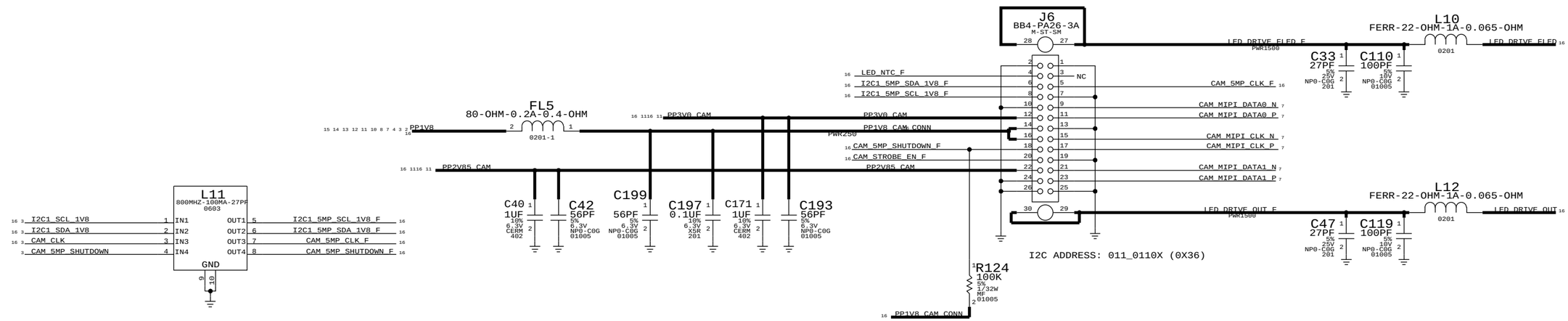

VGA CAMERA CONN

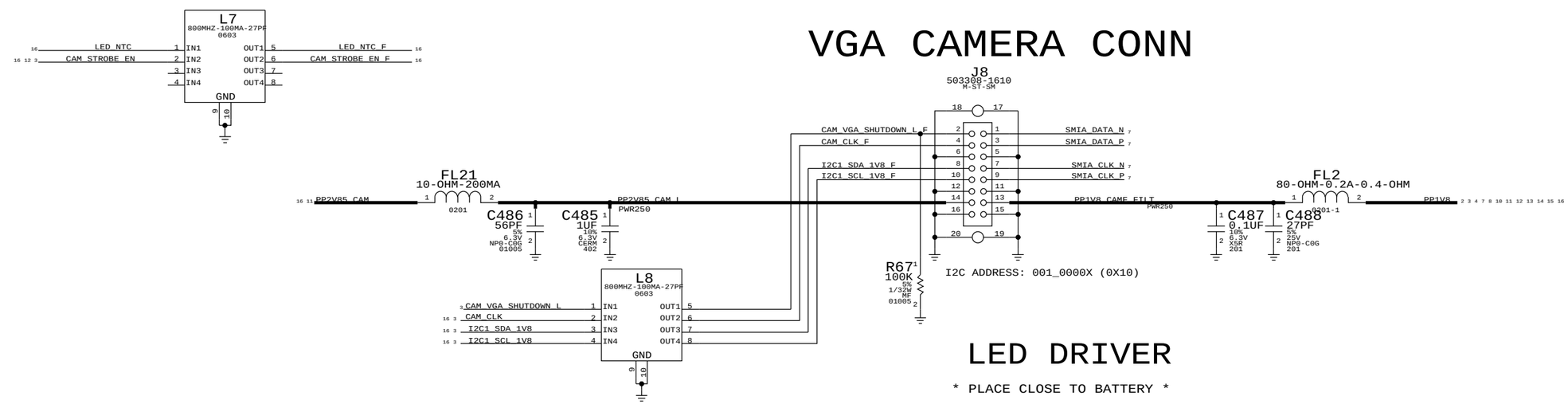

LED DRIVER

* PLACE CLOSE TO BATTERY *

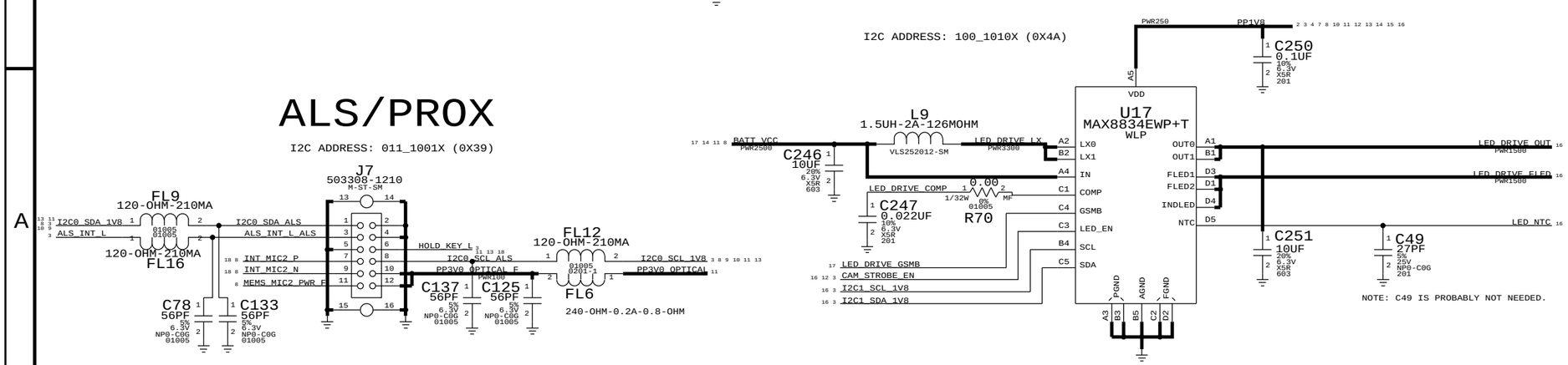

ALS/PROX

I2C ADDRESS: 011_1001X (0X39)

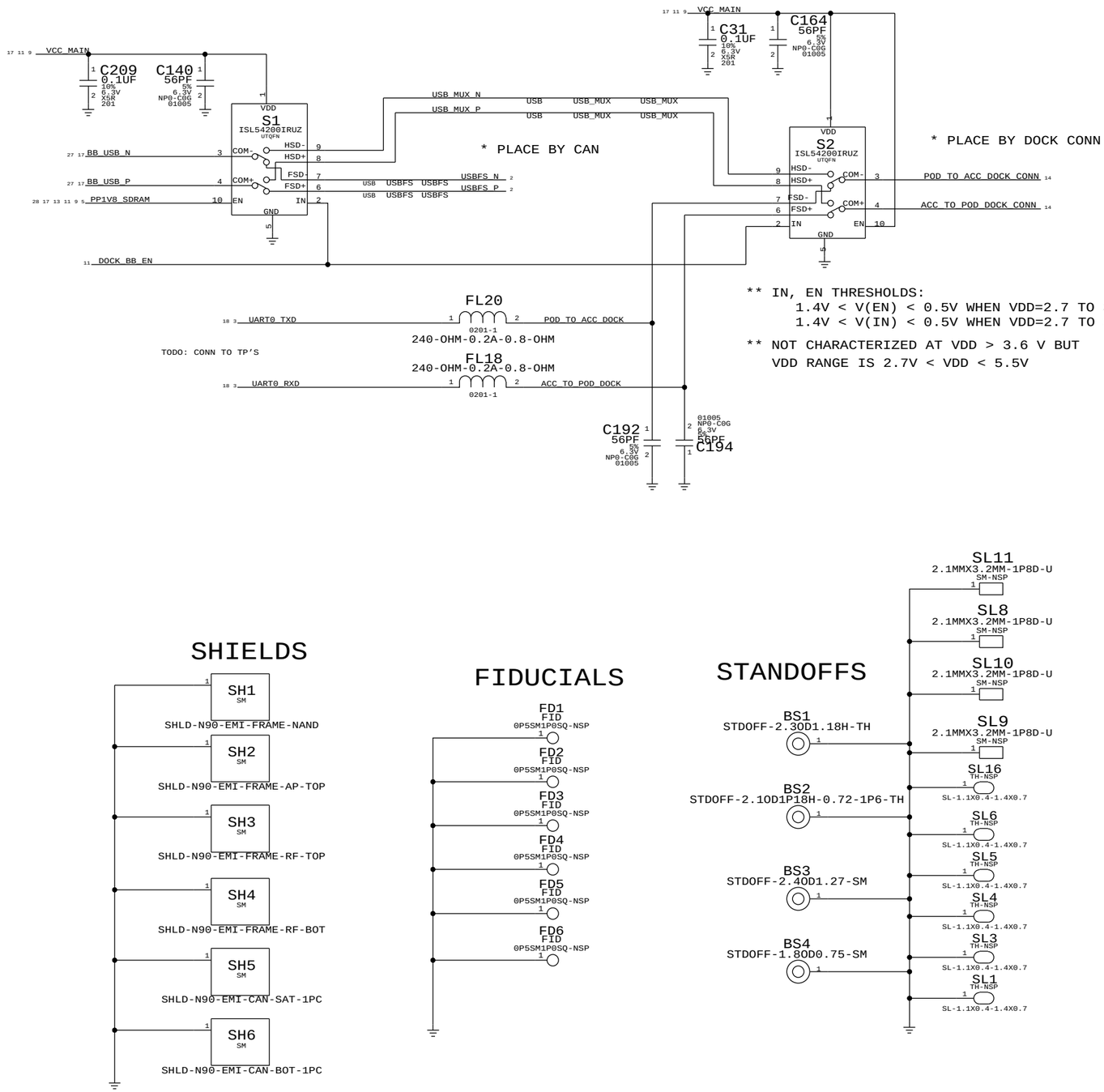

AP/RADIO INTERFACE

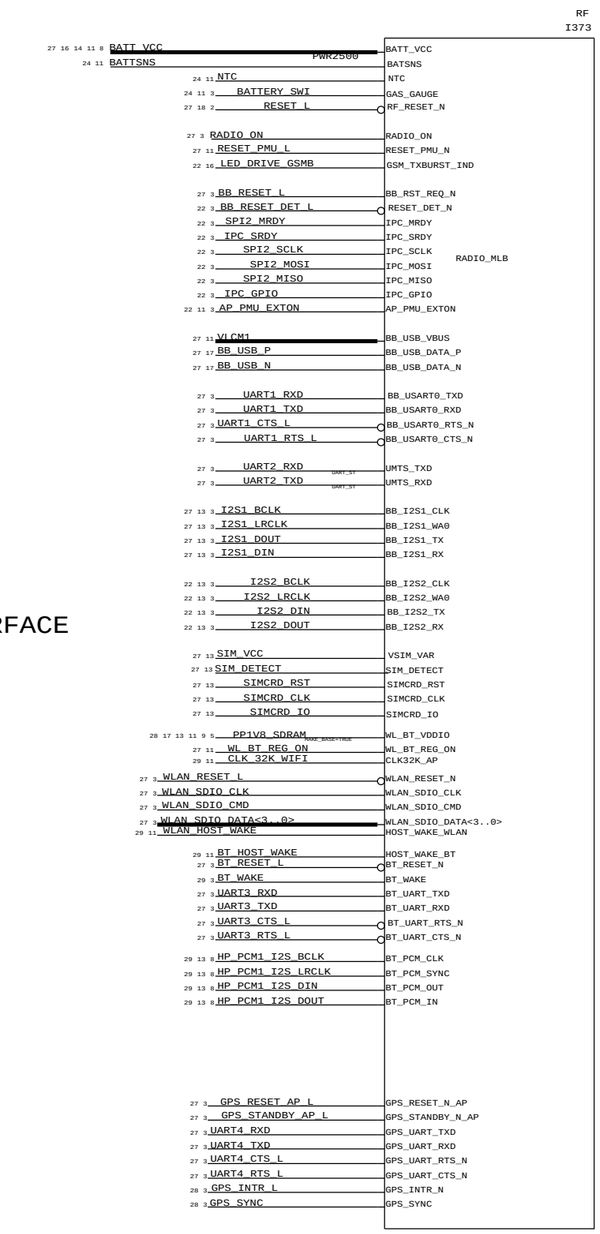

GPIO

TODO: CONN TO TP'S

3	FORCE_DFU	TP421	NOSTUFF
16 13 11 3	HOLD_KEY_L	TP412	NOSTUFF
14 13	MENU_KEY_L	TP423	NOSTUFF
13 11 10 3	RINGER_A	TP424	NOSTUFF
13 10 3	VOL_UP_L	TP415	NOSTUFF
13 10 3	VOL_DWN_L	TP425	NOSTUFF

TEST

2	TST_CLKOUT	TP8	NOSTUFF

GRAPE

15 3	NIMBUS_INT_L	PP8 (P4MM SM)	
15 3	SPI1_SCLK (SPI_ST)	PP9 (P4MM SM)	
15 11	CLK_32K_PMU	TP477	NOSTUFF

LCM

15 11	LCD_BL_CC_F	TP465	NOSTUFF
15 11	LCD_BL_CA_F	TP466	NOSTUFF
15 11	LCD_5V7_AVDDH	TP468	NOSTUFF
15 11	LCD_BOOST_CTRL	TP469	NOSTUFF

UART

17 3	UART0_TXD	TP449	NOSTUFF
17 3	UART0_RXD	TP450	NOSTUFF

USB

14	USB_DP_DOCK	TP451	NOSTUFF
14	USB_DM_DOCK	TP452	NOSTUFF

ACCESSORY DETECT

14 11	ACC_DETECT_L	TP474	NOSTUFF
14 11	ACC_IDENTIFY	TP475	NOSTUFF

POWER

15 11	ADC_IN7	TP457	NOSTUFF
14	USB_POWR_NO_PROTECT_CONN	TP455	NOSTUFF
11 2	USB_BRICKID	TP5	NOSTUFF
10	PP2V0_VIBE_F	TP7	NOSTUFF

AUDIO

SPEAKER

14	SPKR_CONN_P	TP429	NOSTUFF
14	SPKR_CONN_N	TP430	NOSTUFF

RECEIVER

8	RCVR_CONN_P	TP413	NOSTUFF
8	RCVR_CONN_N	TP431	NOSTUFF

MIC

14 8	INT_MIC1_P	TP432	NOSTUFF
14 8	INT_MIC1_N	TP433	NOSTUFF
16 8	INT_MIC2_P	TP10	NOSTUFF
16 8	INT_MIC2_N	TP11	NOSTUFF

LINE OUT

14	LINE_OUT_L_CONN	TP1	NOSTUFF
14	LINE_OUT_R_CONN	TP2	NOSTUFF
14 8	LINE_REF (PWR50 AUDIO)	TP3	NOSTUFF

HEADPHONE

10 9	EXT_MIC_P_CONN	TP438	NOSTUFF
10 9	HPHONE_RET_SNS_CONN	TP12	NOSTUFF
10 9	HPHONE_R_CONN	TP440	NOSTUFF
10 9	HPHONE_L_CONN	TP441	NOSTUFF
10 9	HPHONE_DET_CONN	TP442	NOSTUFF

SIGNAL GND(SENSE)

TP443 NOSTUFF

POWER GND

TP444 NOSTUFF

TP447 NOSTUFF

RESET

17 2	RESET_L	TP6	NOSTUFF

1. ALL RESISTANCE VALUES ARE IN OHMS, 0.1 WATT +/- 5%.
2. ALL CAPACITANCE VALUES ARE IN MICROFARADS.
3. ALL CRYSTALS & OSCILLATOR VALUES ARE IN HERTZ.

N90 ASHLEY_PMU SUB-DESIGN
Thu Mar 18 14:15:23 2010

REV	ECN	DESCRIPTION OF REVISION	CK APPD / DATE
A	0000880153	PRODUCTION RELEASED	2010-03-23

LAYOUT: PLACE XW1 AND XW2 REMOTELY BY AP

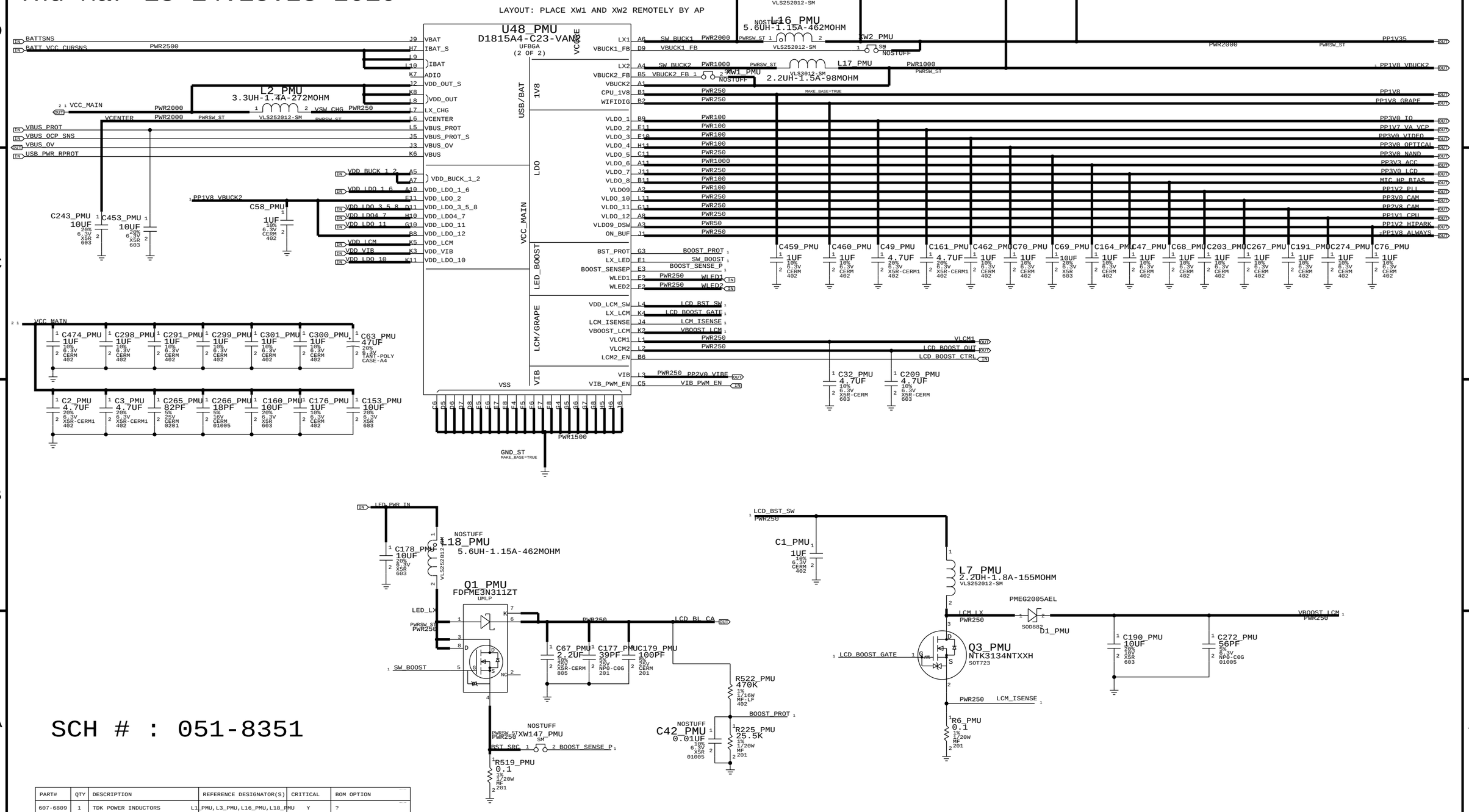

SCH # : 051-8351

PART#	QTY	DESCRIPTION	REFERENCE DESIGNATOR(S)	CRITICAL	BOM OPTION
607-6809	1	TDK POWER INDUCTORS	L1_PMU,L3_PMU,L16_PMU,L18_PMU	Y	?

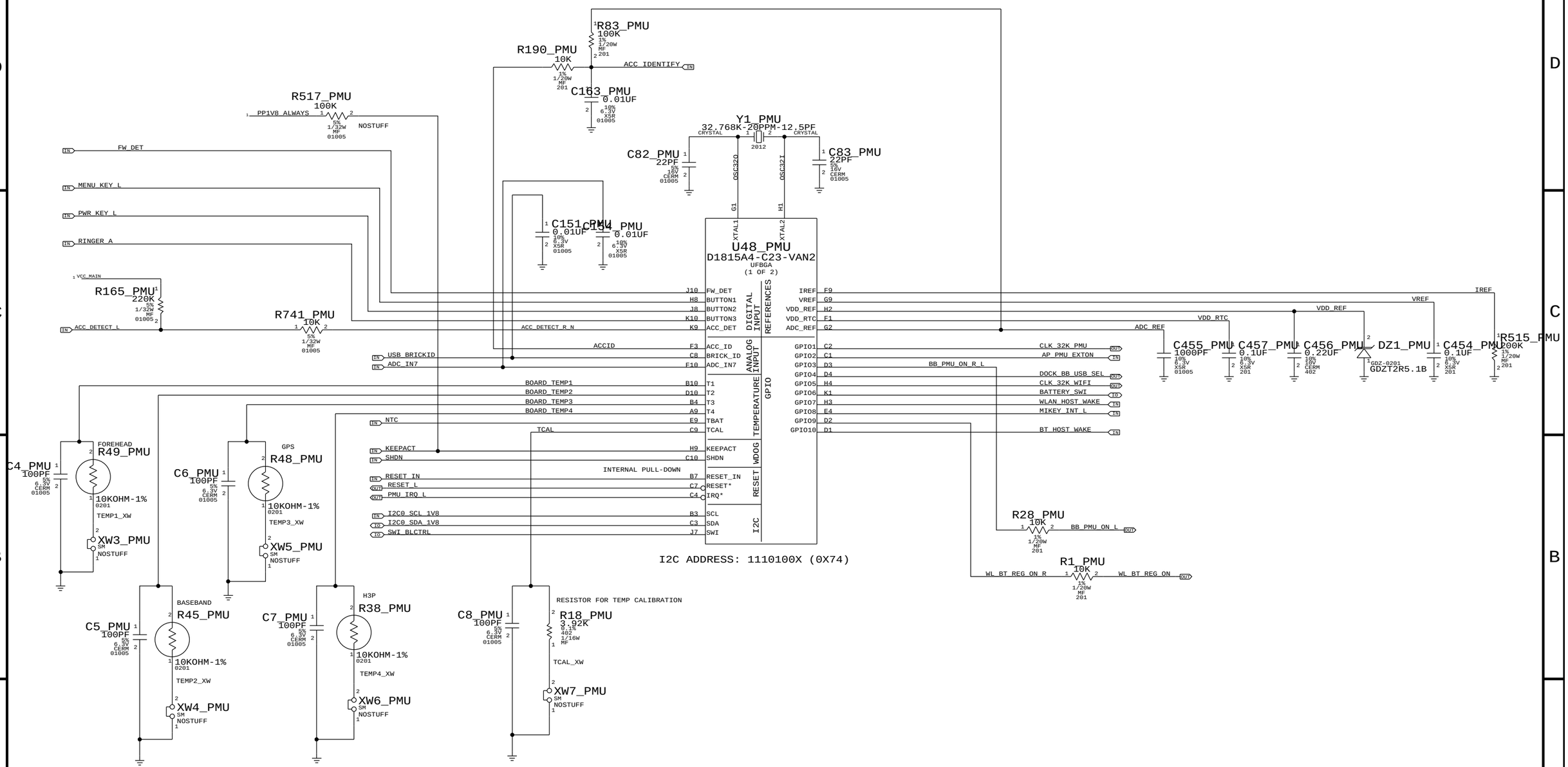
R83_PMU
100K
1%
1/20W
MF
201
R190_PMU
10K
1%
1/20W
MF
201
ACC_IDENTIFY
C163_PMU
0.01UF
10%
6.3V
X5R
01005
R517_PMU
100K
PP1V8_ALWAYS
5%
1/32W
MF
01005
NOSTUFF
Y1_PMU
32.768K-20PPM-12.5PF
CRYSTAL
2012
C82_PMU
22PF
5%
16V
CERM
01005
C83_PMU
22PF
5%
16V
CERM
01005
OSC32O
OSC32I
C151_PMU
0.01UF
C154_PMU
0.01UF
U48_PMU
D1815A4-C23-VAN2
UFBGA
(1 OF 2)
XTAL1
XTAL2
FW_DET
MENU_KEY_L
PWR_KEY_L
RINGER_A
VCC_MAIN
R165_PMU
220K
5%
1/32W
MF
01005
ACC_DETECT_L
R741_PMU
10K
5%
1/32W
MF
01005
ACC_DETECT_R_N
ACCID
USB_BRICKID
ADC_IN7
BOARD_TEMP1
BOARD_TEMP2
BOARD_TEMP3
BOARD_TEMP4
NTC
TCAL
KEEPACT
SHDN
INTERNAL PULL-DOWN
RESET_IN
RESET_L
PMU_IRQ_L
I2C0_SCL_1V8
I2C0_SDA_1V8
SWI_BLCTRL
DIGITAL INPUT
REFERENCES
ANALOG INPUT
TEMPERATURE
GPIO
WDOG
RESET
I2C
J10 FW_DET
H8 BUTTON1
J8 BUTTON2
K10 BUTTON3
K9 ACC_DET
F3 ACC_ID
C8 BRICK_ID
F10 ADC_IN7
B10 T1
D10 T2
B4 T3
A9 T4
E9 TBAT
C9 TCAL
H9 KEEPACT
C10 SHDN
B7 RESET_IN
C7 RESET*
C4 IRQ*
B3 SCL
C3 SDA
J7 SWI
IREF F9
VREF G9
VDD_REF H2
VDD_RTC F1
ADC_REF G2
GPIO1 C2
GPIO2 C1
GPIO3 D3
GPIO4 D4
GPIO5 H4
GPIO6 K1
GPIO7 H3
GPIO8 E4
GPIO9 D2
GPIO10 D1
CLK_32K_PMU
AP_PMU_EXTON
BB_PMU_ON_R_L
DOCK_BB_USB_SEL
CLK_32K_WIFI
BATTERY_SWI
WLAN_HOST_WAKE
MIKEY_INT_L
BT_HOST_WAKE
I2C ADDRESS: 1110100X (0X74)
C455_PMU
1000PF
10%
6.3V
X5R
01005
C457_PMU
0.1UF
10%
6.3V
X5R
201
C456_PMU
0.22UF
10%
10V
CERM
402
DZ1_PMU
GDZ-0201
GDZT2R5.1B
C454_PMU
0.1UF
10%
6.3V
X5R
201
R515_PMU
100K
1%
1/20W
MF
201
R28_PMU
10K
1%
1/20W
MF
201
BB_PMU_ON_L
R1_PMU
10K
1%
1/20W
MF
201
WL_BT_REG_ON_R
WL_BT_REG_ON
C4_PMU
100PF
5%
6.3V
CERM
01005
FOREHEAD
R49_PMU
10KOHM-1%
0201
TEMP1_XW
XW3_PMU
SM
NOSTUFF
C6_PMU
100PF
5%
6.3V
CERM
01005
GPS
R48_PMU
10KOHM-1%
0201
TEMP3_XW
XW5_PMU
SM
NOSTUFF
C5_PMU
100PF
5%
6.3V
CERM
01005
BASEBAND
R45_PMU
10KOHM-1%
0201
TEMP2_XW
XW4_PMU
SM
NOSTUFF
C7_PMU
100PF
5%
6.3V
CERM
01005
H3P
R38_PMU
10KOHM-1%
0201
TEMP4_XW
XW6_PMU
SM
NOSTUFF
C8_PMU
100PF
5%
6.3V
CERM
01005
RESISTOR FOR TEMP CALIBRATION
R18_PMU
3.92K
0.1%
402
1/16W
MF
TCAL_XW
XW7_PMU
SM
NOSTUFF

1. ALL RESISTANCE VALUES ARE IN OHMS, 0.1 WATT +/- 5%.
2. ALL CAPACITANCE VALUES ARE IN MICROFARADS.
3. ALL CRYSTALS & OSCILLATOR VALUES ARE IN HERTZ.

REV	ECN	DESCRIPTION OF REVISION	CK APPD / DATE
A	0000880153	PRODUCTION RELEASED	2010-03-23

N90 (ICE3) HSPA RADIO
PVT - 04/15/10:BRD REV9

PAGE	CONTENTS
02	BASEBAND I/O
03	BASEBAND + MEMORY
04	BASEBAND POWER SUPPLY
05	GSM & UMTS TRANSCEIVER
06	POWER AMPS AND RF FRONT END
07	SYSTEM CONNECTORS
08	A-GPS
09	WLAN/BLUETOOTH RADIO

BOARD - 920-XXXX
SCHEMATIC - 951-XXXX
BOM - 630-XXXX

BASEBAND I/O

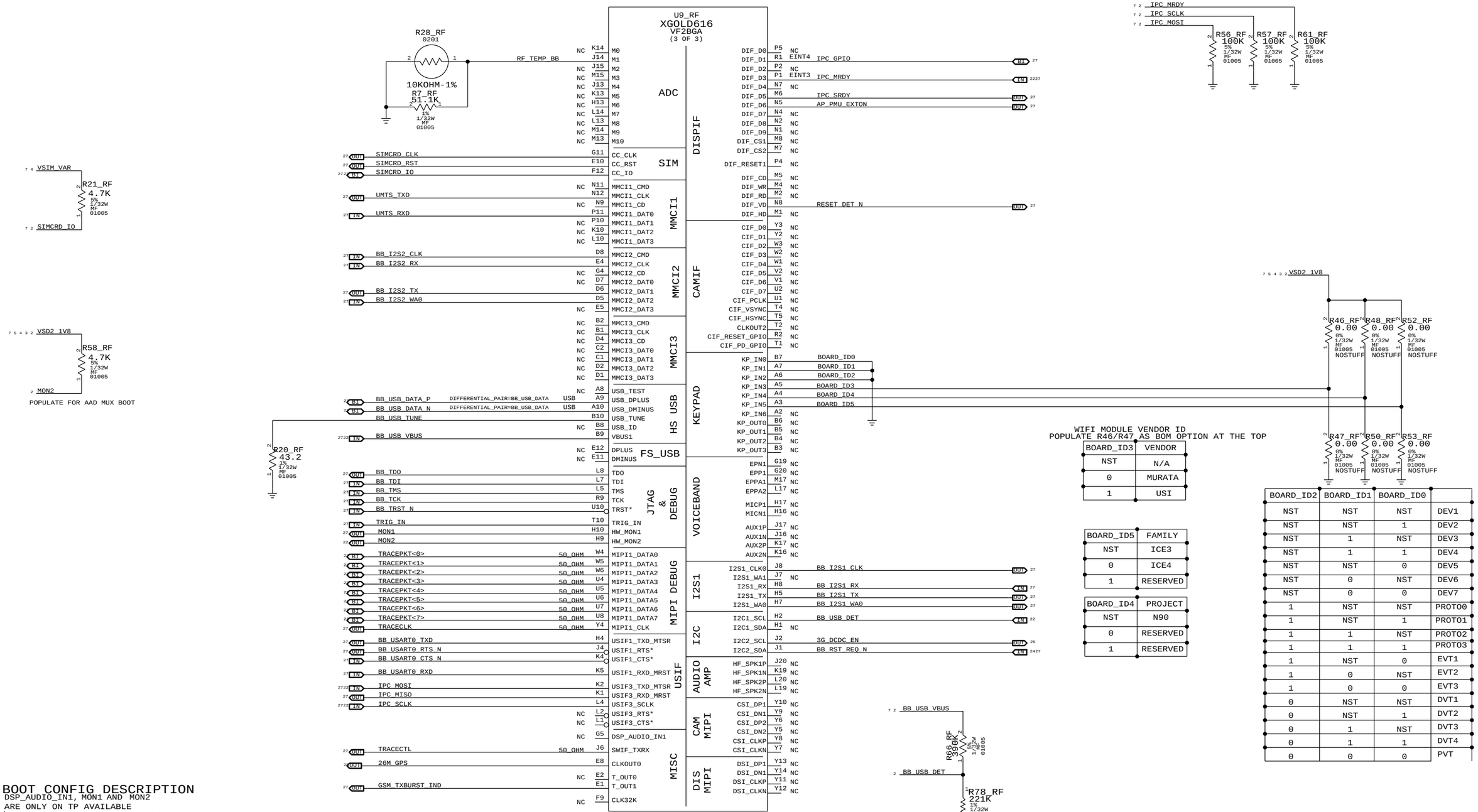

WIFI MODULE VENDOR ID
POPULATE R46/R47 AS BOM OPTION AT THE TOP

BOARD_ID3	VENDOR
NST	N/A
0	MURATA
1	USI

BOARD_ID5	FAMILY
NST	ICE3
0	ICE4
1	RESERVED

BOARD_ID4	PROJECT
NST	N90
0	RESERVED
1	RESERVED

BOARD_ID2	BOARD_ID1	BOARD_ID0	
NST	NST	NST	DEV1
NST	NST	1	DEV2
NST	1	NST	DEV3
NST	1	1	DEV4
NST	NST	0	DEV5
NST	0	NST	DEV6
NST	0	0	DEV7
1	NST	NST	PROTO0
1	NST	1	PROTO1
1	1	NST	PROTO2
1	1	1	PROTO3
1	NST	0	EVT1
1	0	NST	EVT2
1	0	0	EVT3
0	NST	NST	DVT1
0	NST	1	DVT2
0	1	NST	DVT3
0	1	1	DVT4
0	0	0	PVT

BOOT CONFIG DESCRIPTION

DSP_AUDIO_IN1, MON1 AND MON2
ARE ONLY ON TP AVAILABLE

DSP_AUDIO_IN1 HWCFG[3]	MON1 HWCFG[2]	MON2 HWCFG[1]	TRIG_IN HWCFG[0]	BOOT CONFIG DESCRIPTION
0	0	0	0	EXTERNAL BOOT VIA USB
0	0	0	1	NOR FLASH - EBU CONFIG: 16-BIT AD MUXED
0	0	1	0	NOR FLASH - EBU CONFIG: 16-BIT AAD MUXED

BASEBAND MEMORY

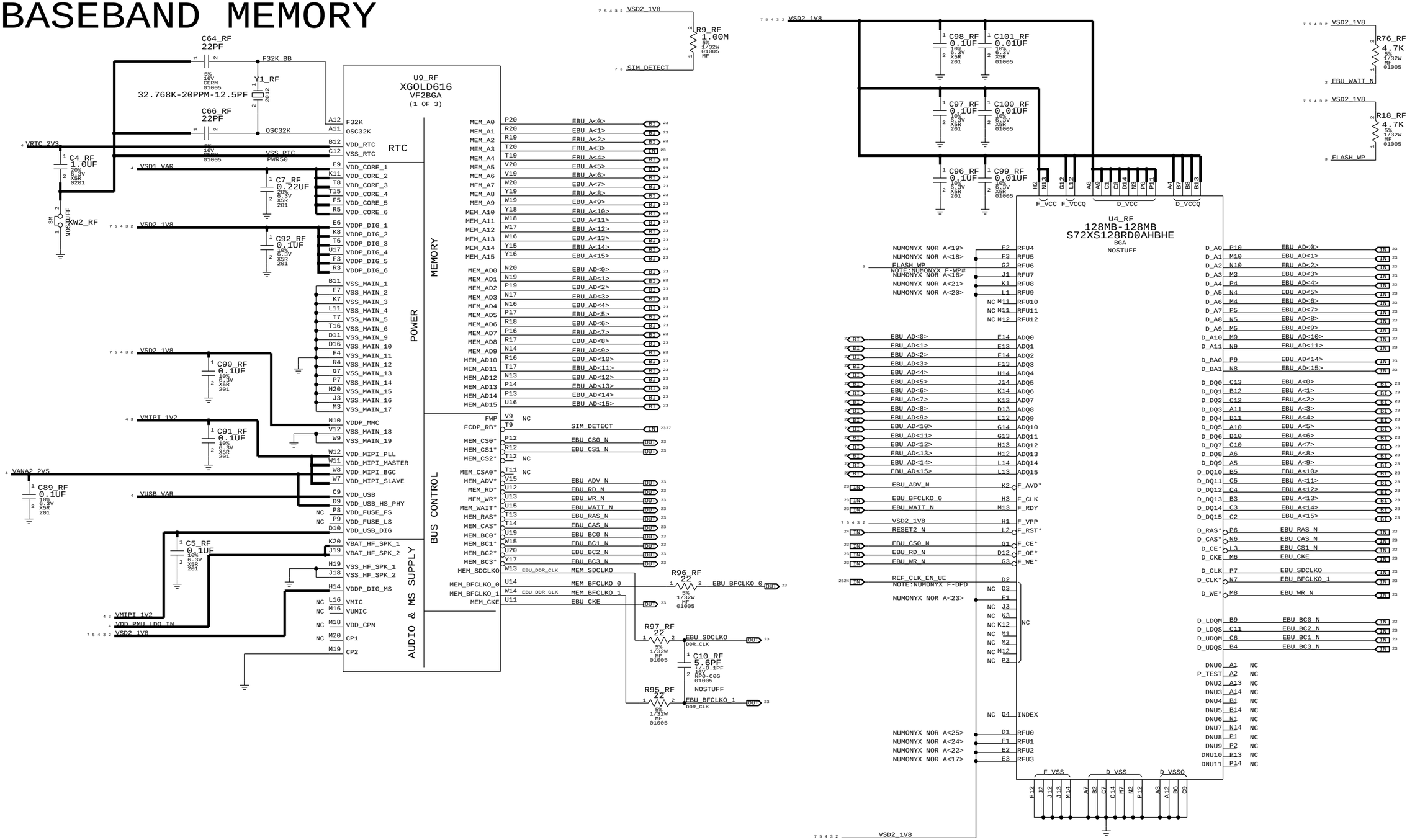

BASEBAND POWER SUPPLY

BATTERY CONNECTOR

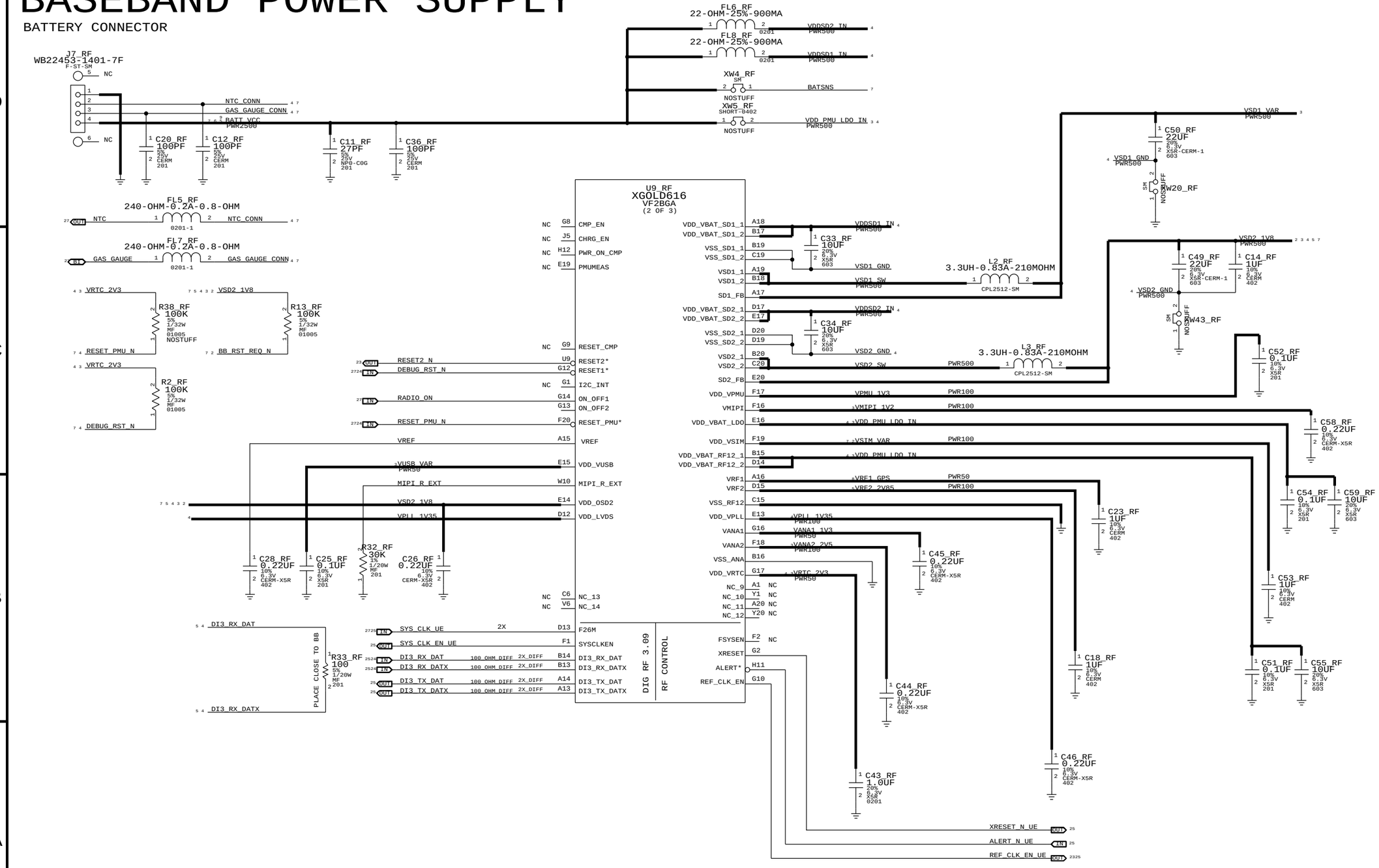

GSM & UMTS TRANSCEIVER - SMARTI UE

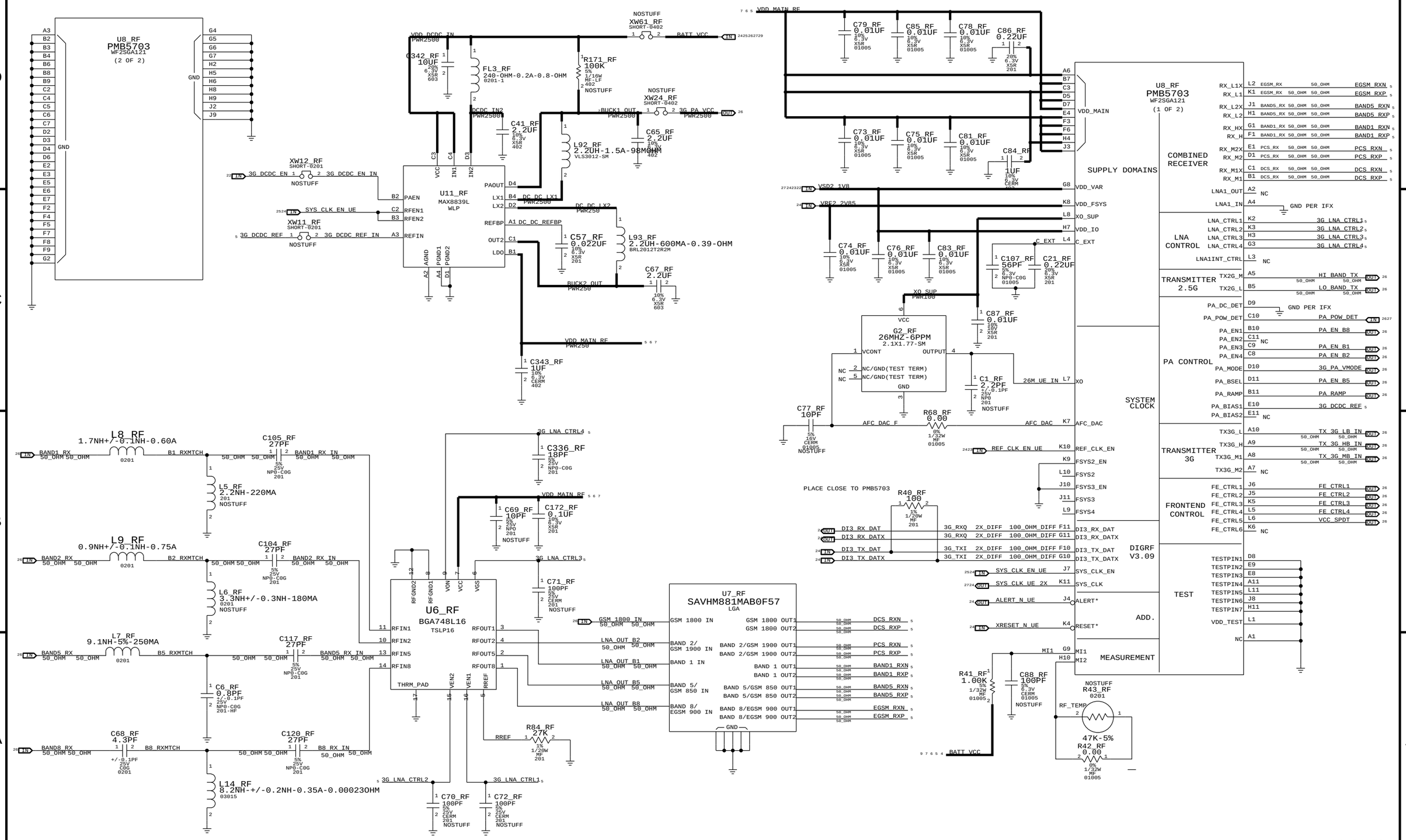

POWER AMPS AND RF FRONT-END MODULE

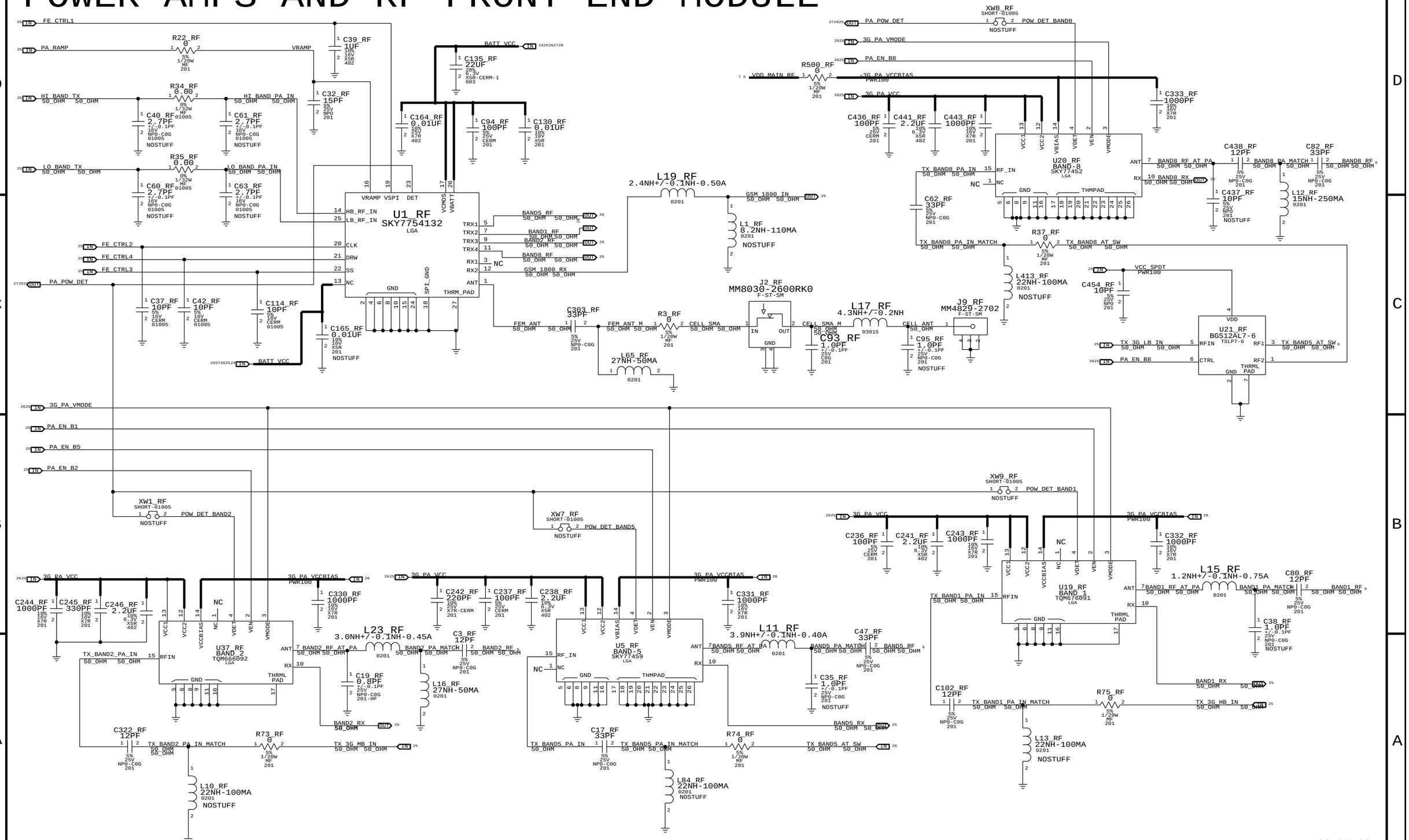

SYSTEM CONNECTORS

AP CONNECTIONS

9 7 6 5 4	BATT_VCC	OUT
4	BATSNS	OUT
4	NTC	OUT
4	GAS_GAUGE	IO
7	RF_RESET_N	OUT
7 4	RADIO_ON	IN
7 4	RESET_PMU_N	IN
2	GSM_TXBURST_IND	OUT
7 4 2	BB_RST_REQ_N	IN
2	RESET_DET_N	OUT
2	IPC_MRDY	IN
2	IPC_SRDY	OUT
2	IPC_SCLK	IN
2	IPC_MOSI	IN
2	IPC_MISO	OUT
2	IPC_GPIO	OUT
2	AP_PMU_EXTON	OUT
7 2	BB_USB_VBUS	IN
7 2	BB_USB_DATA_P	IO
7 2	BB_USB_DATA_N	IO
7 2	BB_USART0_TXD	OUT
7 2	BB_USART0_RXD	IN
7 2	BB_USART0_RTS_N	OUT
7 2	BB_USART0_CTS_N	IN
7 2	UMTS_TXD	OUT
7 2	UMTS_RXD	IN
7 2	BB_I2S1_CLK	IN
7 2	BB_I2S1_WA0	IN
7 2	BB_I2S1_TX	OUT
7 2	BB_I2S1_RX	IN
2	BB_I2S2_CLK	IN
2	BB_I2S2_WA0	IN
2	BB_I2S2_TX	OUT
2	BB_I2S2_RX	IN
7 4 2	VSIM_VAR	OUT
7 3	SIM_DETECT	IN
7 2	SIMCRD_RST	OUT
7 2	SIMCRD_CLK	OUT
7 2	SIMCRD_IO	IO
9 8	WL_BT_VDDIO	IN
9 7	WL_BT_REG_ON	IN
9	CLK32K_AP 2X	IN
9 7	WLAN_RESET_N	IN
9 7	WLAN_SDIO_CLK	IO
9 7	WLAN_SDIO_CMD	IO
9 7	WLAN_SDIO_DATA<3..0>	IO
9	HOST_WAKE_WLAN	OUT
9	HOST_WAKE_BT	OUT
9 7	BT_RESET_N	IN
9	BT_WAKE	IN
9 7	BT_UART_TXD	OUT
9 7	BT_UART_RXD	IN
9 7	BT_UART_RTS_N	OUT
9 7	BT_UART_CTS_N	IN
9	BT_PCM_CLK	IO
9	BT_PCM_SYNC	IO
9	BT_PCM_OUT	IO
9	BT_PCM_IN	IO
8 7	GPS_RESET_N_AP	IN
8 7	GPS_STANDBY_N_AP	IN
8 7	GPS_UART_TXD	IO
8 7	GPS_UART_RXD	IO
8 7	GPS_UART_RTS_N	OUT
8 7	GPS_UART_CTS_N	IN
8	GPS_INTR_N	OUT
8	GPS_SYNC	IO

WLAN/BT

PP7_RF	WLAN_TRST_N	9
PP8_RF	WLAN_TCK	9
PP9_RF	WLAN_TMS	9
PP10_RF	WLAN_TDO	9
PP11_RF	WLAN_TDI	9
PP12_RF	WL_BT_REG_ON	7 9
PP13_RF	WLAN_GPS_CLK32K	8 9
PP14_RF	WLAN_CLK_REQ	9
PP15_RF	WLAN_SDIO_CLK	7 9
PP16_RF	WLAN_SDIO_CMD	7 9
PP17_RF	WLAN_SDIO_DATA<3>	7 9
PP18_RF	WLAN_SDIO_DATA<2>	7 9
PP19_RF	WLAN_SDIO_DATA<1>	7 9
PP20_RF	WLAN_SDIO_DATA<0>	7 9
PP23_RF	BT_UART_TXD	7 9
PP24_RF	BT_UART_RXD	7 9
PP25_RF	BT_UART_RTS_N	7 9
PP26_RF	BT_UART_CTS_N	7 9

GPS TRX

PP22_RF	GPS_UART_TXD	7 8
PP5_RF	SYS_CLK_UE	4 5
PP21_RF	GPS_UART_RXD	7 8
PP6_RF	PA_POW_DET	5 6

DIGITAL AUDIO

PP1_RF	BB_I2S1_CLK	2 7
PP2_RF	BB_I2S1_WA0	2 7
PP3_RF	BB_I2S1_TX	2 7
PP4_RF	BB_I2S1_RX	2 7

POWER DOMAINS

TP24_RF	VDD_MAIN_RF	5 6
TP11_RF	BUCK1_OUT	5
TP32_RF		
TP33_RF	BATT_VCC	4 5 6 7 9

SIM

TP65_RF	SIMCRD_IO	2 7
TP56_RF	SIMCRD_RST	2 7
TP59_RF	SIMCRD_CLK	2 7
TP12_RF	VSIM_VAR	2 4 7

DEBUG CONNECTOR

J1_RF AXE680124 M-ST-SM

BATT_VCC 4 5 6 7 9

Pin	Signal	Pin	Signal
10	DEBUG_RST_N (2724 OUT)	9	VSD2_1V8 (2 3 4 5)
12	RESET_PMU_N (2724 OUT)	11	RF_RESET_N (OUT 27)
14	RADIO_ON (2724 OUT)	13	
16		15	BT_RESET_N (OUT 2729)
18	BB_USB_VBUS (2722 OUT)	17	WL_BT_REG_ON (OUT 2729)
20	BB_USB_DATA_P (2722 BI)	19	BT_UART_TXD (IN 2729)
22	BB_USB_DATA_N (2722 BI)	21	BT_UART_RXD (OUT 2729)
24		23	BT_UART_RTS_N (IN 2729)
26	BB_TCK (2722 OUT)	25	BT_UART_CTS_N (OUT 2729)
28	BB_TMS (2722 OUT)	27	
30	BB_TDO (2722 IN)	29 NC	EXT_SDIO_VCC
32	BB_TDI (2722 OUT)	31	WLAN_RESET_N (BI 2729)
34	BB_TRST_N (2722 OUT)	33 NC	WLAN_SDIO_CLK
36 NC	BB_RTCK	35 NC	WLAN_SDIO_CMD
38		37 NC	WLAN_SDIO_DATA<3>
40	TRACECLK (22 IN)	39 NC	WLAN_SDIO_DATA<2>
42	TRACECTL (22 IN)	41 NC	WLAN_SDIO_DATA<1>
44	TRACEPKT<7> (22 IN)	43 NC	WLAN_SDIO_DATA<0>
46	TRACEPKT<6> (22 IN)	45 NC	WLAN_TCK
48	TRACEPKT<5> (22 IN)	47 NC	WLAN_TMS
50	TRACEPKT<4> (22 IN)	49 NC	WLAN_TDO
52	TRACEPKT<3> (22 IN)	51 NC	WLAN_TDI
54	TRACEPKT<2> (22 IN)	53 NC	WLAN_TRST_N
56	TRACEPKT<1> (22 IN)	55	
58	TRACEPKT<0> (22 IN)	57	GPS_RESET_N_AP (OUT 2728)
60	TRIG_IN (22 OUT)	59	GPS_STANDBY_N_AP (OUT 2728)
62		61	GPS_UART_TXD (IN 2728)
64	BB_USART0_TXD (2722 IN)	63	GPS_UART_RXD (OUT 2728)
66	BB_USART0_RXD (2722 OUT)	65	GPS_UART_RTS_N (IN 2728)
68	BB_USART0_RTS_N (2722 IN)	67	GPS_UART_CTS_N (OUT 2728)
70	BB_USART0_CTS_N (2722 OUT)	69	
72	UMTS_TXD (2722 IN)	71	VSIM_VAR (2 4 7)
74	UMTS_RXD (2722 OUT)	73	SIM_DETECT (OUT 2327)
76		75	SIMCRD_RST (IN 2227)
78		77	SIMCRD_CLK (IN 2227)
80		79	SIMCRD_IO (BI 2227)
84		83	

82 81 NOSTUFF

USART0

TP82_RF	BB_USART0_TXD	2 7
TP89_RF	BB_USART0_RXD	2 7
TP28_RF	BB_USART0_RTS_N	2 7
TP29_RF	BB_USART0_CTS_N	2 7

NTC

TP3_RF	NTC_CONN	4

GAS GAUGE

TP10_RF	GAS_GAUGE_CONN	4

CONTROL

TP74_RF	RADIO_ON	4 7
TP22_RF	BB_RST_REQ_N	2 4 7
TP30_RF	DEBUG_RST_N	4 7
TP7_RF	RESET_PMU_N	4 7

JTAG

TP1_RF	BB_TCK	2 7
TP2_RF	BB_TMS	2 7
TP4_RF	BB_TDO	2 7
TP5_RF	BB_TDI	2 7
TP6_RF	BB_TRST_N	2 7
TP68_RF	MON1	

A-GPS

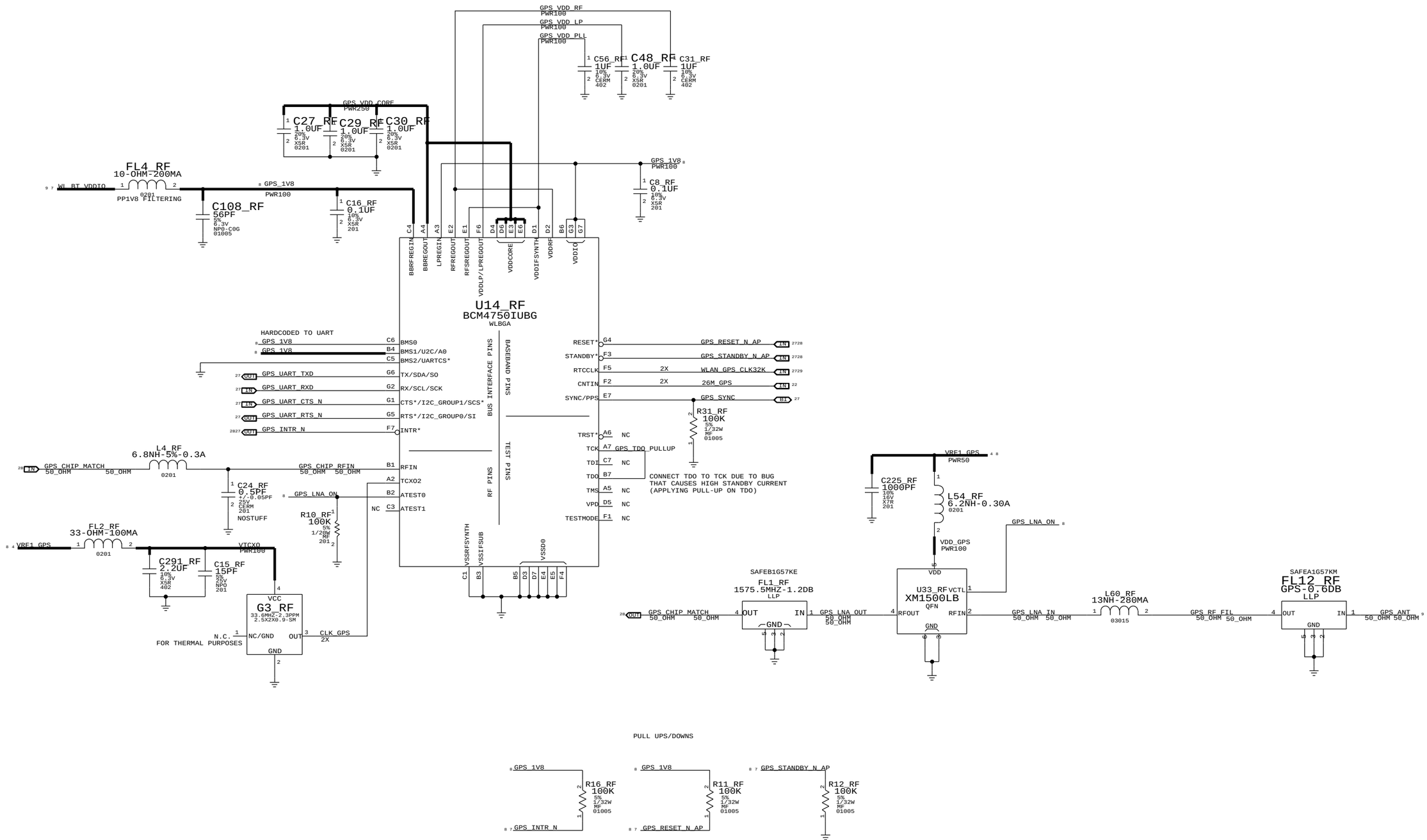
GPS_VDD_RF PWR100
GPS_VDD_LP PWR100
GPS_VDD_PLL PWR100
C56_RF 1UF 10% 6.3V CERM 402
C48_RF 1.0UF 20% 6.3V X5R 0201
C31_RF 1UF 10% 6.3V CERM 402
GPS_VDD_CORE PWR250
C27_RF 1.0UF 20% 6.3V X5R 0201
C29_RF 1.0UF 20% 6.3V X5R 0201
C30_RF 1.0UF 20% 6.3V X5R 0201
FL4_RF 10-OHM-200MA 0201 PP1V8 FILTERING
WL_BT_VDDIO
GPS_1V8 PWR100
C8_RF 0.1UF 10% 6.3V X5R 201
C108_RF 56PF 5% 6.3V NP0-C0G 01005
C16_RF 0.1UF 10% 6.3V X5R 201
BBRFREGIN BBREGOUT LPREGIN RFREGOUT RFSREGOUT VDDLP/LPREGOUT VDDCORE VDDIFSYNTH VDDRF VDDIO
U14_RF BCM4750IUBG WLBGA
HARDCODED TO UART
GPS_1V8
BMS0
BMS1/U2C/A0
BMS2/UARTCS*
GPS_UART_TXD TX/SDA/SO
GPS_UART_RXD RX/SCL/SCK
GPS_UART_CTS_N CTS*/I2C_GROUP1/SCS*
GPS_UART_RTS_N RTS*/I2C_GROUP0/SI
GPS_INTR_N INTR*
BUS INTERFACE PINS
BATTERY AND PINS
RESET* GPS_RESET_N_AP
STANDBY* GPS_STANDBY_N_AP
RTCCLK 2X WLAN_GPS_CLK32K
CNTIN 2X 26M_GPS
SYNC/PPS GPS_SYNC
R31_RF 100K 5% 1/32W MF 01005
TRST* NC
TCK GPS_TDO_PULLUP
TDI NC
TDO
TMS NC
VPD NC
TESTMODE NC
CONNECT TDO TO TCK DUE TO BUG THAT CAUSES HIGH STANDBY CURRENT (APPLYING PULL-UP ON TDO)
TEST PINS
RF PINS
L4_RF 6.8NH-5%-0.3A 0201
GPS_CHIP_MATCH 50_OHM
GPS_CHIP_RFIN 50_OHM
RFIN
C24_RF 0.5PF +/-0.05PF 25V CERM 201 NOSTUFF
GPS_LNA_ON
TCXO2
ATEST0
ATEST1
R10_RF 100K 5% 1/20W MF 201
FL2_RF 33-OHM-100MA 0201
VRE1_GPS
VTCXO PWR100
C291_RF 2.2UF 10% 6.3V X5R 402
C15_RF 15PF 5% 25V NPO 201
VSSRFSYNTH VSSIFSUB VSSD0
VCC G3_RF 33.6MHZ-2.3PPM 2.5X2X0.9-SM
N.C. NC/GND OUT CLK_GPS 2X
GND
FOR THERMAL PURPOSES
VRE1_GPS PWR50
C225_RF 1000PF 10% 16V X7R 201
L54_RF 6.2NH-0.30A 0201
VDD_GPS PWR100
SAFEB1G57KE FL1_RF 1575.5MHZ-1.2DB LLP
GPS_CHIP_MATCH 50_OHM
GPS_LNA_OUT 50_OHM
U33_RF XM1500LB QFN VDD VCTL RFOUT RFIN GND
GPS_LNA_IN 50_OHM
L60_RF 13NH-280MA 03015
GPS_RF_FIL 50_OHM
SAFEA1G57KM FL12_RF GPS-0.6DB LLP
GPS_ANT 50_OHM
PULL UPS/DOWNS
R16_RF 100K 5% 1/32W MF 01005
R11_RF 100K 5% 1/32W MF 01005
R12_RF 100K 5% 1/32W MF 01005
GPS_INTR_N
GPS_RESET_N_AP
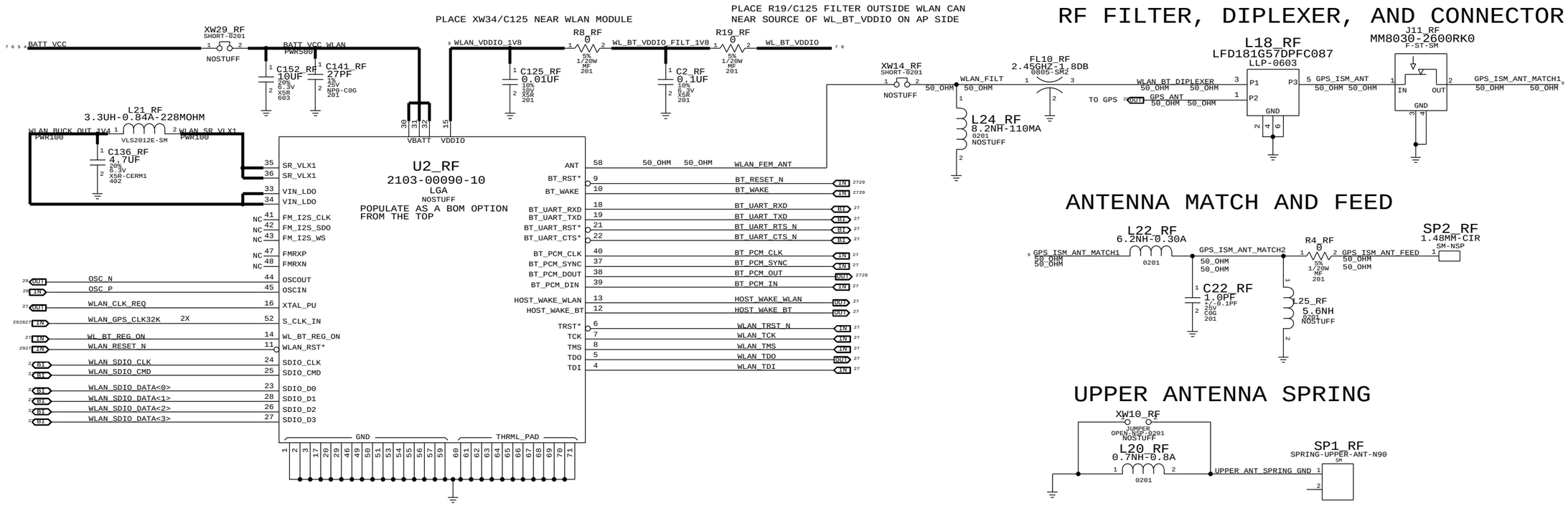
WLAN/BLUETOOTH/FM RADIO